SOLID

CHAINS STANDARD

INNOVATIVE ECONOMY
NATIONAL COHESION STRATEGY

EUROPEAN UNION
COHESION FUND
EUROPEAN REGIONAL
DEVELOPMENT FUND

PROFESSIONALISM AND EXPERIENCE

Manufacturing since 1980
We employ 100 highly-qualified specialists
We have completed more than 1000000 production orders
Over 95% of customers issued us the highest rating

TABLE OF CONTENTS

1. ROLLER CHAINS 2
   - TYPE A
     - SINGLE-STRAND ROLLER CHAINS 3
     - DOUBLE-STRAND ROLLER CHAINS 4
     - TRIPLE-STRAND ROLLER CHAINS 5
   - TYPE B
     - SINGLE-STRAND ROLLER CHAINS 6
     - DOUBLE-STRAND ROLLER CHAINS 7
     - TRIPLE-STRAND ROLLER CHAINS 8

2. ROLLER CHAINS WITH A SPECIAL STRAIGHT PLATE, WITH ONE OR TWO OPENINGS, MOUNTED ON ONE OR BOTH SIDES 10
   - WITH ONE HOLE 11
   - WITH TWO HOLES 12

3. ROLLER CHAINS WITH A SPECIAL OFFSET PLATE, WITH ONE OR TWO OPENINGS, MOUNTED ON ONE OR BOTH SIDES 14
   - WITH ONE HOLE 15
   - WITH TWO HOLES 16

4. ROLLER CHAINS WITH ONE/TWO-SIDED ELONGATED PINS 18
   - WITH ONE-SIDED ELONGATED PINS 19
   - WITH TWO-SIDED ELONGATED PINS 19

5. BUSH CHAINS (WITH A METRIC SCALE) 20

6. ROLLER CHAINS TYPE S 21

7. FLYER CHAINS OF AN EVEN CONFIGURATION OF PLATES 24
   - TYPE AL 25
   - TYPE LH 26
   - TYPE LL 27

8. GALL'S CHAINS 28
   - LIGHT VERSION - TYPE L 29
   - HEAVY VERSION - TYPE C
     - RIVETED WITHOUT ROVES 30
     - RIVETED WITH ROVES 31

9. CONVEYOR CHAINS - SOLID PIN TYPE 32
   - TYPE FVT 33
   - TYPE FV 34
   - TYPE M 35
   - TYPE MT 36

10. CONVEYOR CHAINS - HOLLOW PIN TYPE 38
    - TYPE FV 39
    - TYPE MC 40

1 ROLLER CHAINS

ACCORDING TO PN-77/M-84168, DIN 8187

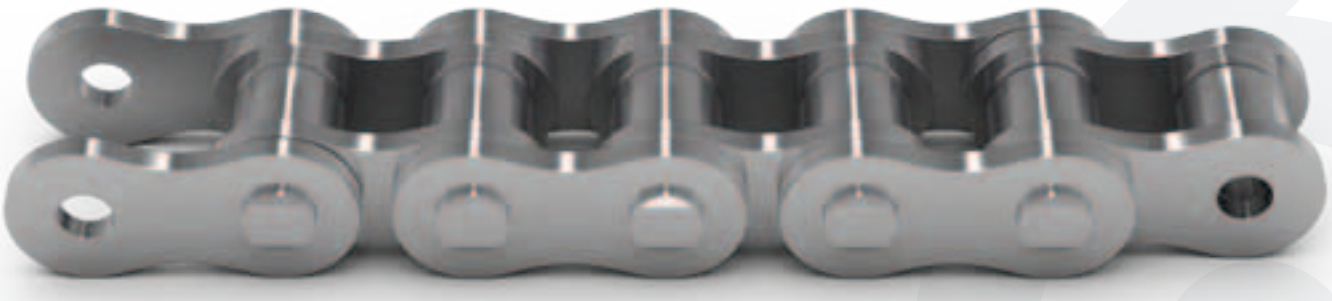

In terms of the design, we can distinguish simplex, duplex and triplex chains, while in terms of the size, type A and B (size differences are shown in the table).

In these chains, the rollers (extruded and calibrated) seated on the pins increase their durability and lifetime, and reduce gear wheel wear. Thanks to our 30 years of experience, strict control and using only high quality steel for chain production, we can ensure maintenance-free operation of the customer's equipment, while reducing the machine park maintenance costs. They are most often used in areas where high requirements are in place: the automotive sector, machine and equipment construction, and the packaging, printing, food and agriculture industries.

Type A roller chains differ from type B in terms of their size, due to their thicker plates and bigger rollers, which greatly improve their durability.

TYPE A

SINGLE-STRAND ROLLER CHAINS

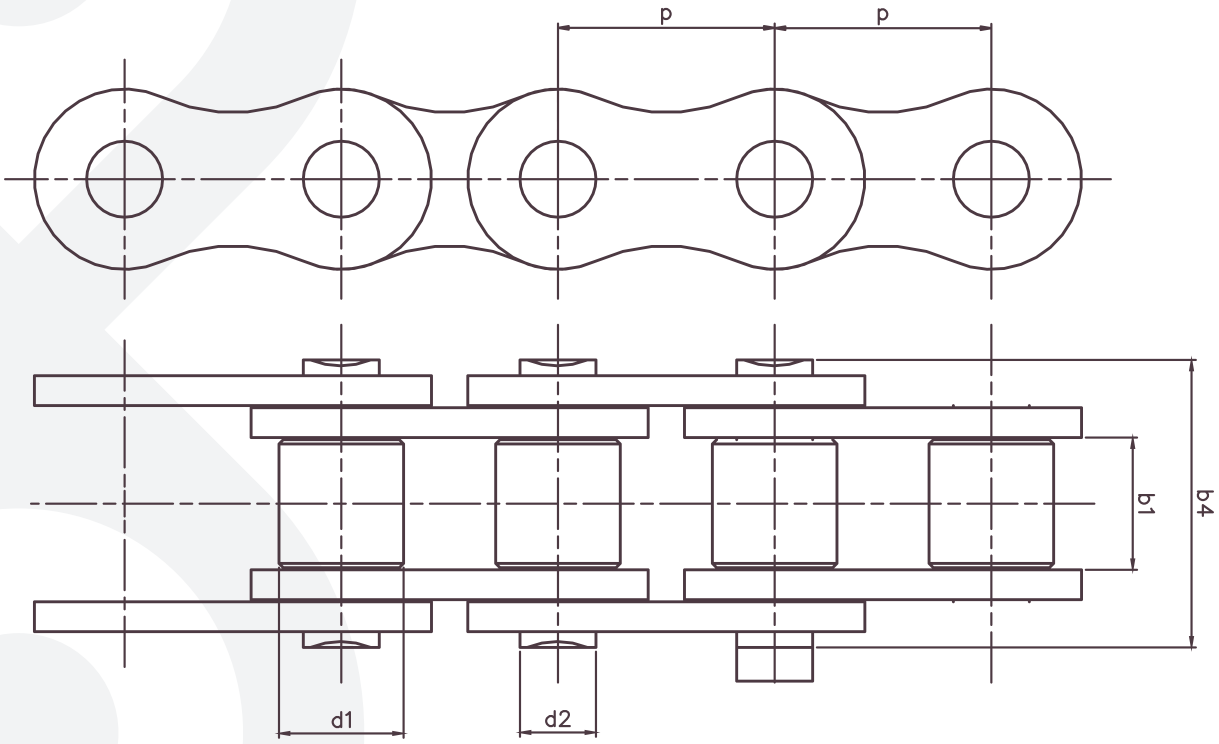

chain	p *inch*	p *mm*	b1 min	d1 max	d2 max	b4 max	breaking load *kN*	mass *kg/m*
06A	3/8	9,525	4,77	5,08	3,59	12,00	9,30	0,33
08A	1/2	12,70	7,95	7,92	3,96	18,30	14,10	0,62
10A	5/8	15,875	9,53	10,16	5,08	22,20	22,20	1,01
12A	3/4	19,05	12,70	11,91	5,94	27,40	31,80	1,48
16A	1	25,40	15,88	15,88	7,92	36,80	56,70	2,60
20A	1 1/4	31,75	19,05	19,05	9,53	43,60	88,50	3,76
24A	1 1/2	38,10	25,40	22,23	11,10	54,70	127,00	5,50
28A	1 3/4	44,45	25,40	25,40	12,70	58,50	172,00	7,20
32A	2	50,80	31,75	28,58	14,27	68,40	226,80	10,30

DOUBLE-STRAND ROLLER CHAINS

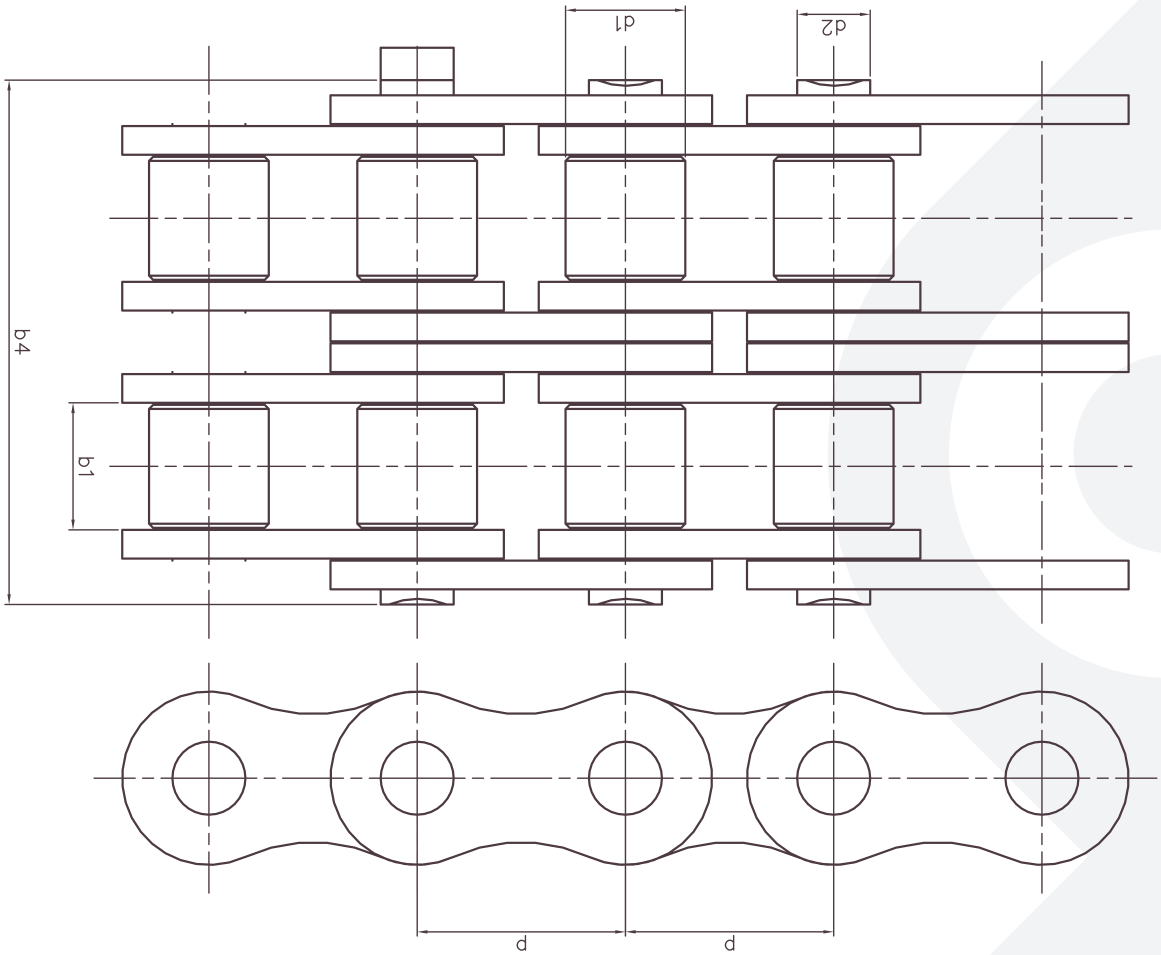

chain	p *inch*	p *mm*	b1 min	d1 max	d2 max	b4 max	breaking load *kN*	mass *kg/m*
06A-2	3/8	9,525	4,77	5,08	3,59	24,50	19,00	0,65
08A-2	1/2	12,70	7,95	7,92	3,96	33,00	28,20	1,22
10A-2	5/8	15,875	9,53	10,16	5,08	40,70	44,40	2,00
12A-2	3/4	19,05	12,70	11,91	5,94	50,40	63,60	2,95
16A-2	1	25,40	15,88	15,88	7,92	66,50	113,40	5,20
20A-2	1 1/4	31,75	19,05	19,05	9,53	79,60	177,00	7,60
24A-2	1 1/2	38,10	25,40	22,23	11,10	100,50	254,00	10,80
28A-2	1 3/4	44,45	25,40	25,40	12,70	107,80	344,80	14,20
32A-2	2	50,80	31,75	28,58	14,27	127,50	453,60	19,50

TRIPLE-STRAND ROLLER CHAINS

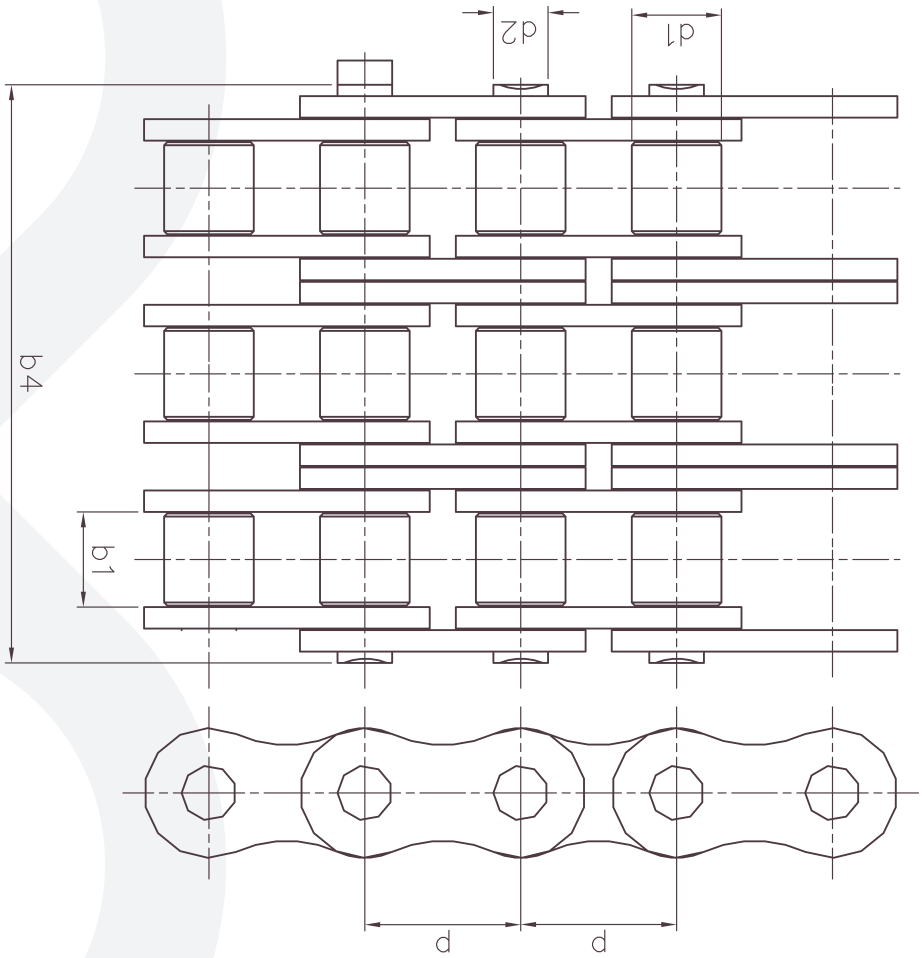

chain	p *inch*	p *mm*	b1 min	d1 max	d2 max	b4 max	breaking load *kN*	mass *kg/m*
06A-3	3/8	9,525	4,77	5,08	3,59	34,70	27,80	0,97
08A-3	1/2	12,70	7,95	7,92	3,96	48,00	42,30	1,83
10A-3	5/8	15,875	9,53	10,16	5,08	58,90	66,60	2,97
12A-3	3/4	19,05	12,70	11,91	5,94	73,70	95,40	4,35
16A-3	1	25,40	15,88	15,88	7,92	96,00	170,10	7,90
20A-3	1 1/4	31,75	19,05	19,05	9,53	115,50	265,50	11,40
24A-3	1 1/2	38,10	25,40	22,23	11,10	146,10	381,00	15,80
28A-3	1 3/4	44,45	25,40	25,40	12,70	156,80	517,20	21,50
32A-3	2	50,80	31,75	28,58	14,27	186,10	580,40	30,20

TYPE B

SINGLE-STRAND ROLLER CHAINS

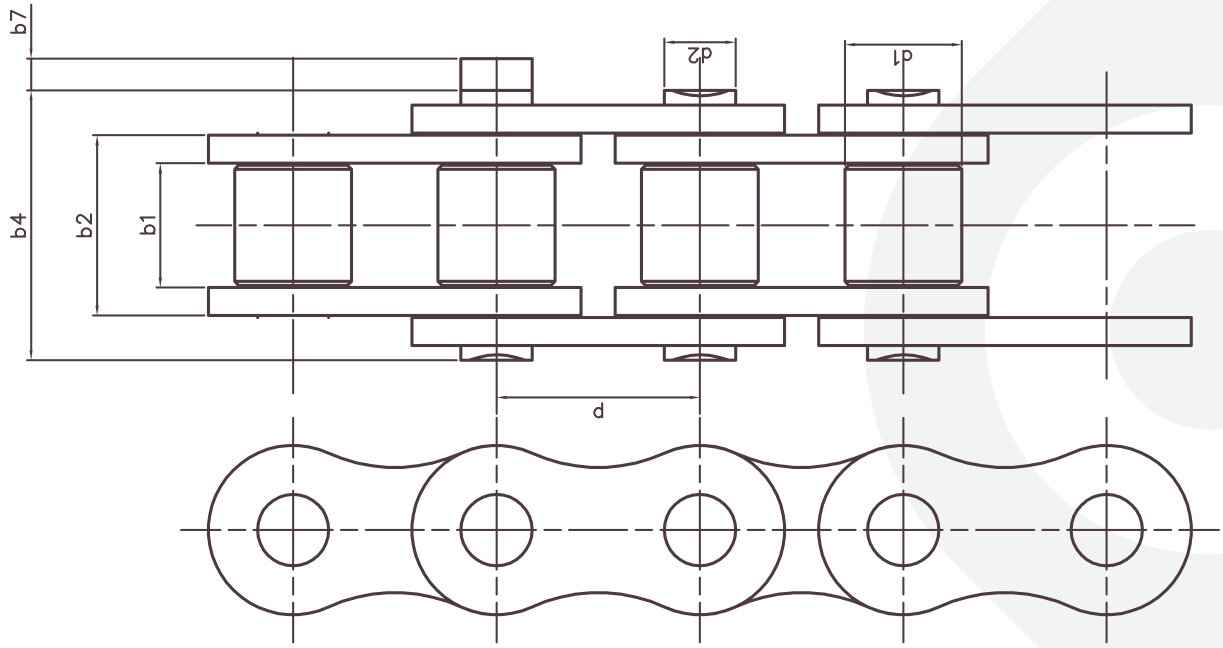

chain	P *inch*	P *mm*	b1 min *mm*	b2 max *mm*	b4 max *mm*	b7 max *mm*	d1 max *mm*	d2 max *mm*	e *mm*	mass *kg/m*	breaking load *N*
06B-1	3/8	9,525	5,72	8,53	13,5	3,3	6,35	3,28	10,24	0,41	9 100
08B-1	1/2	12,7	7,75	11,3	11,3	3,9	8,51	4,45	13,92	0,7	18 200
10B-1	5/8	15,875	9,65	13,28	19,6	4,1	10,16	5,08	16,59	0,95	22 700
12B-1	3/4	19,05	11,68	15,62	22,7	4,6	12,07	5,72	19,46	1,25	29 500
16B-1	1	25,4	17,02	25,45	36,1	5,4	15,88	8,28	31,88	2,7	58 000
20B-1	1 1/4	31,75	19,56	29,01	43,2	6,1	19,05	10,19	36,45	3,6	95 000
24B-1	1 1/2	38,1	25,4	37,92	53,4	6,6	25,4	14,63	48,36	6,7	170 000
28B-1	1 3/4	44,45	30,99	46,58	65,1	7,4	27,94	15,9	59,56	8,3	200 000
32B-1	2	50,8	30,99	45,57	67,4	7,9	29,21	17,81	58,55	10,5	260 000
40B-1	2,5	63,5	38,1	55,75	82,6	10,2	39,37	22,09	72,29	16	360 000
48B-1	3	76,2	45,72	70,56	99,1	10,5	48,26	29,24	91,21	25	560 000

DOUBLE-STRAND ROLLER CHAINS

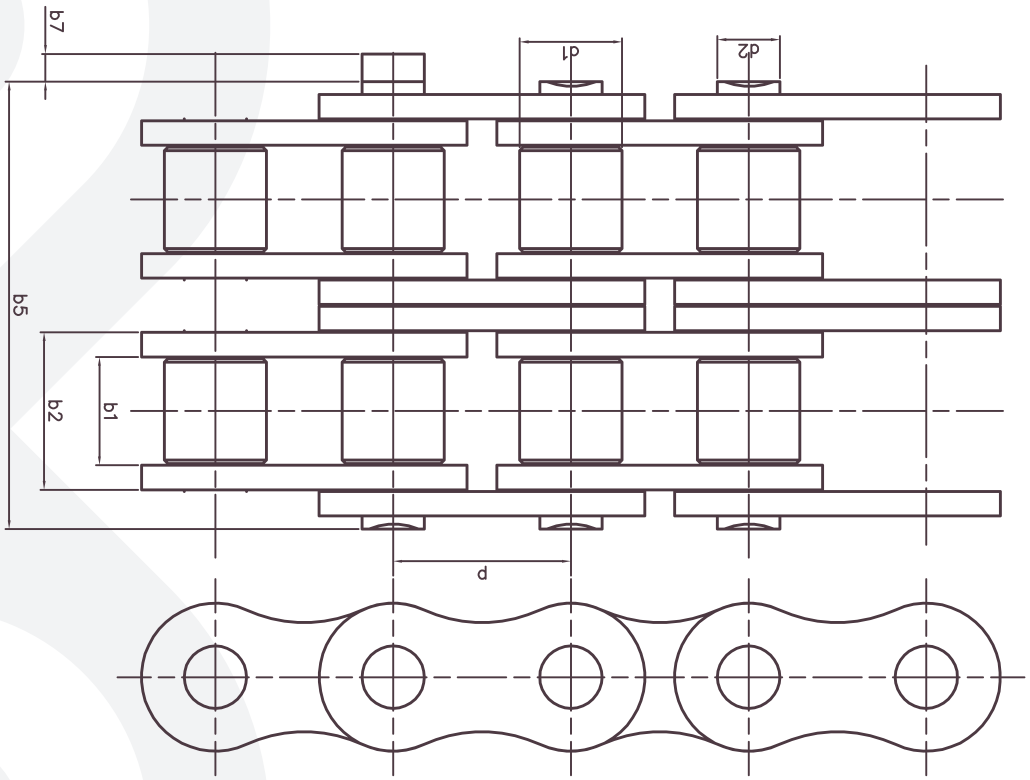

chain	P *inch*	P *mm*	b1 min *mm*	b2 max *mm*	b5 max *mm*	b7 max *mm*	d1 max. *mm*	d2 max *mm*	e *mm*	mass *kg/m*	breaking load *N*
06B-2	3/8	9,525	5,72	8,53	23,8	3,3	6,35	3,28	10,24	0,78	17 300
08B-2	1/2	12,7	7,75	11,3	31	3,9	8,51	4,45	13,92	1,36	31 800
10B-2	5/8	15,875	9,65	13,28	36,2	4,1	10,16	5,08	16,59	1,85	45 400
12B-2	3/4	19,05	11,68	15,62	42,2	4,6	12,07	5,72	19,46	2,35	59 000
16B-2	1	25,4	17,02	25,45	68	5,4	15,88	8,28	31,88	5,4	110 000
20B-2	1 1/4	31,75	19,56	29,01	79,7	6,1	19,05	10,19	36,45	7,14	180 000
24B-2	1 1/2	38,1	25,4	37,92	101,8	6,6	25,4	14,63	48,36	13,68	321 000
28B-2	1 3/4	44,45	30,99	46,58	124,7	7,4	27,94	15,9	59,56	17,65	381 000
32B-2	2	50,8	30,99	45,57	126	7,9	29,21	17,81	58,55	18,6	495 000
40B-2	2,5	63,5	38,1	55,75	154,9	10,2	39,37	22,09	72,29	32	680 000
48B-2	3	76,2	45,72	70,56	190,4	10,5	48,26	29,24	91,21	50	1 000 000

TRIPLE-STRAND ROLLER CHAINS

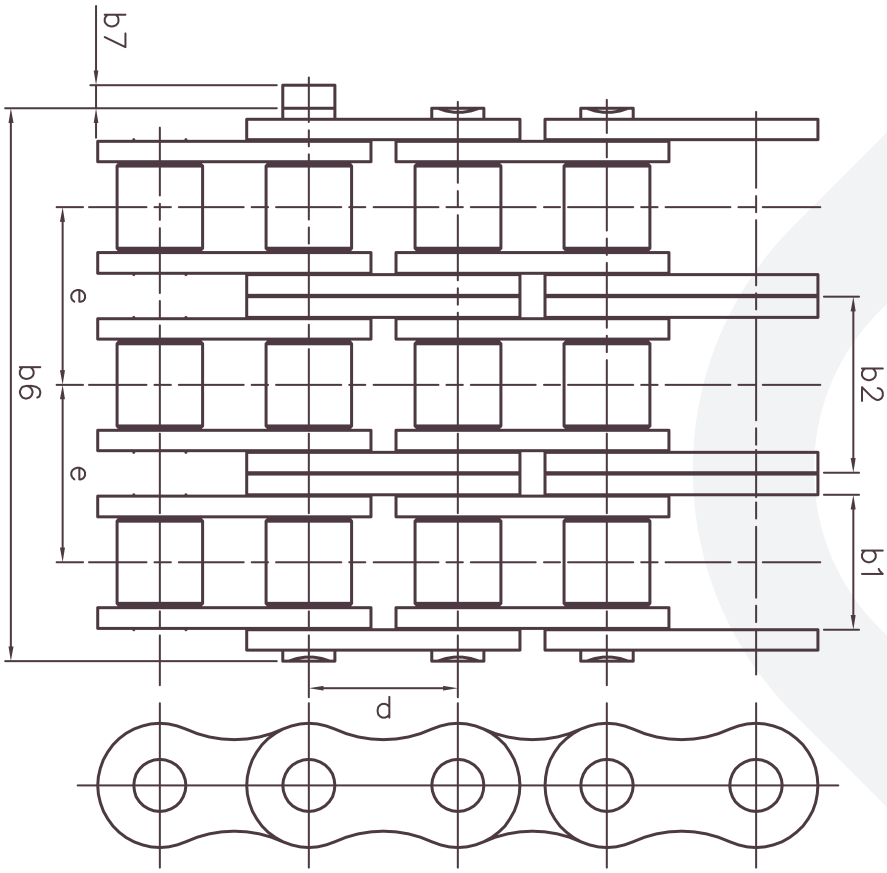

chain	P *inch*	P *mm*	b1 min *mm*	b2 max *mm*	b6 max *mm*	b7 max *mm*	d1 max *mm*	d2 max *mm*	e *mm*	mass *kg/m*	breaking load *N*
06B-3	3/7	9,525	5,72	8,53	34	3,3	6,35	3,28	10,24	1,18	25 400
08B-3	1/2	12,7	7,75	11,3	44,9	3,9	8,51	4,45	13,92	2,01	45 400
10B-3	5/8	15,875	9,65	13,28	52,8	4,1	10,16	5,08	16,59	2,7	68 100
12B-3	3/4	19,05	11,68	15,62	61,7	4,6	12,07	5,72	19,46	3,1	88 500
16B-3	1	25,4	17,02	25,45	99,9	5,4	15,88	8,28	31,88	7,3	165 000
20B-3	1 1/4	31,75	19,56	29,01	116,1	6,1	19,05	10,19	36,45	10,6	270 000
24B-3	1 1/2	38,1	25,4	37,92	150,2	6,6	25,4	14,63	48,36	20	485 000
28B-3	1 3/4	44,45	30,99	46,58	184,3	7,4	27,94	15,9	59,56	25	571 000
32B-3	2	50,8	30,99	45,57	184,5	7,9	29,21	17,81	58,55	32	743 000
40B-3	2,5	63,5	38,1	55,75	227,2	10,2	39,37	22,09	72,29	48	1 000 000
48B-3	3	76,2	45,72	70,56	281,6	10,5	48,26	29,24	91,21	75	1 600 000

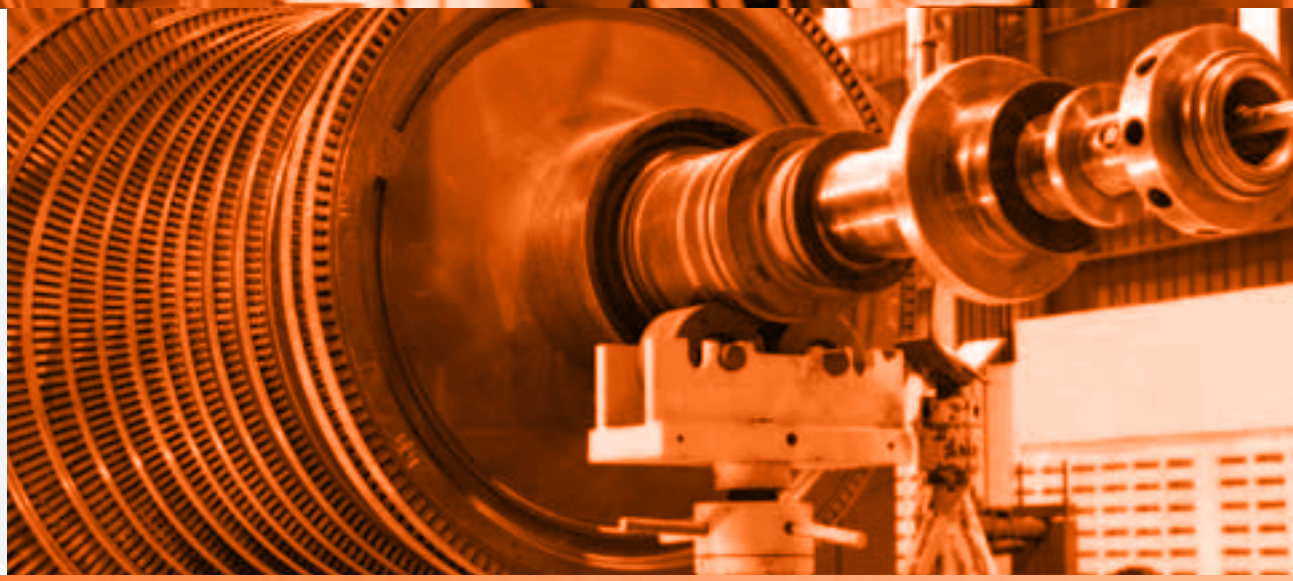

APPLICATIONS

2 ROLLER CHAINS WITH A SPECIAL STRAIGHT PLATE

WITH ONE OR TWO OPENINGS, MOUNTED ON ONE OR BOTH SIDES

ACCORDING TO PN-77/M-84168, DIN 8187

These chains have straight plates with openings designed for mounting additional elements, allowing the chain to be used for the purposes of transporting, scraping, or moving various materials. To respond to the customer's demands, we also design alternative and cost-efficient solutions, thus ensuring the fulfilment of user expectations. Our chains are of high quality and perform well even in the most extreme conditions. We provide these chains in simplex, duplex and triplex versions. They are most commonly used in the food, chemical, pharmaceutical, and agriculture industries.

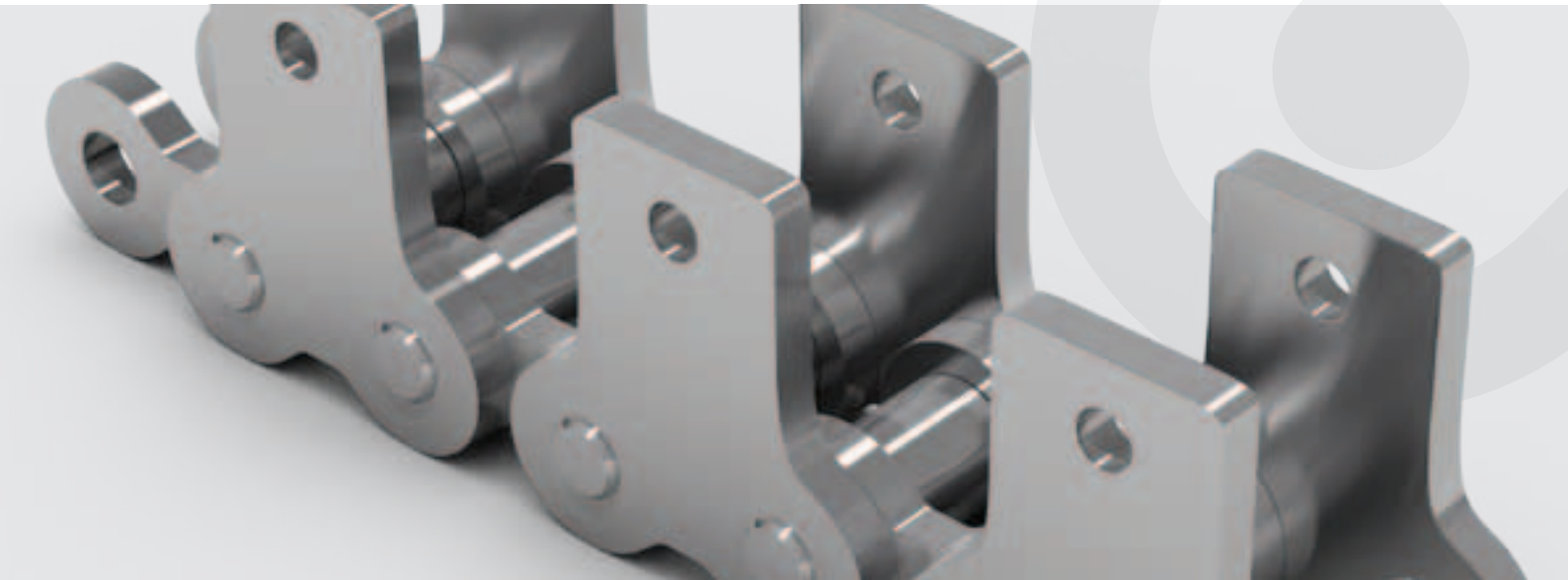

WITH ONE HOLE

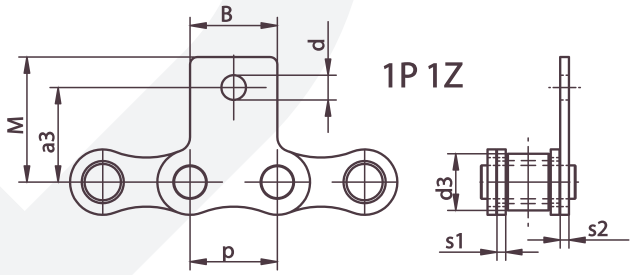

1P 1Z

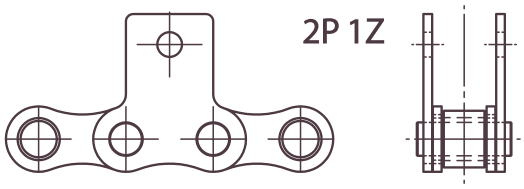

2P 1Z

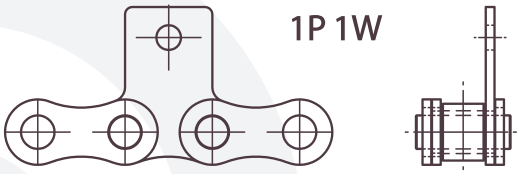

1P 1W

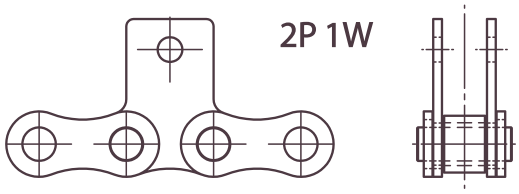

2P 1W

chain	p mm	b1 mm	d3 mm	a3 mm	B mm	M mm	s1 mm	s2 mm	d mm
06B	9,525	5,72	6,35	9,5	8	13,5	1,3	1,3	3,5
08B	12,7	7,75	8,51	13,4	11	18,9	1,6	1,6	4,3
10B	15,875	9,65	10,16	15,2	14	23,9	1,6	1,6	5,2
12B	19,05	11,68	12,07	18,2	18	26	1,8	1,8	6,2
16B	25,4	17,02	15,88	25,5	26	37,6	4	4	9
20B	31,75	19,56	19,05	35	26	45,5	4,5	3,5	9,6
24B	38,1	25,4	25,4	45	30	54,5	6	5	10
28B	44,45	30,99	27,94	55	42	68	7	6	12
32B	50,8	30,99	29,21	63,5	50	77	7	6	14
40B	63,5	38,1	39,37	65	60	86	8	8	17

WITH TWO HOLES

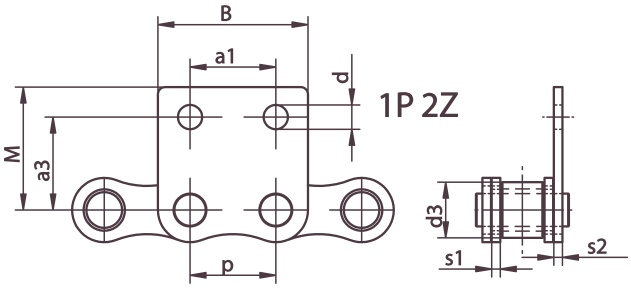

1P 2Z

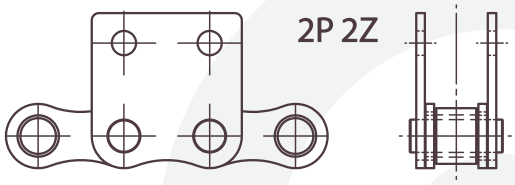

2P 2Z

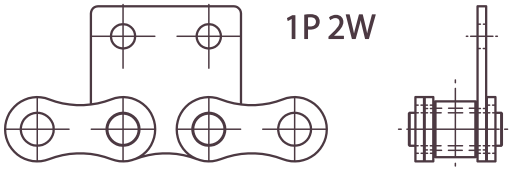

1P 2W

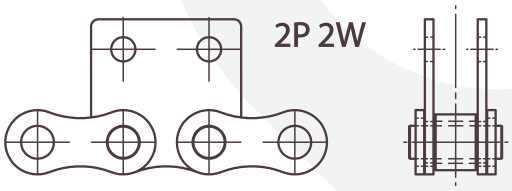

2P 2W

chain	p mm	b1 mm	d3 mm	a1 mm	a3 mm	B mm	M mm	s1 mm	s2 mm	d mm
06B	9,525	5,72	6,35	9,52	9,5	17,32	14,6	1,3	1,3	2,8
08B	12,7	7,75	8,51	12,7	13,4	24,45	18,9	1,6	1,6	4,3
10B	15,875	9,65	10,16	15,76	16,1	28,36	23,9	1,6	1,6	5,2
12B	19,05	11,68	12,07	19	17,8	34,9	25,9	1,8	1,8	6,2
16B	25,4	17,02	15,88	25,4	25,5	49	37,6	4	4	8,2
20B	31,75	19,56	19,05	31,75	35	57,75	45,5	4,5	3,5	9,6
24B	38,1	25,4	25,4	38,1	45	71,1	54,5	6	5	10
28B	44,45	30,99	27,94	44,45	55	81,05	66,7	7	6	12
32B	50,8	30,99	29,21	50,8	63,5	92,6	77	7	6	14
40B	63,5	38,1	39,37	63,5	65	115,5	86	8	8	17

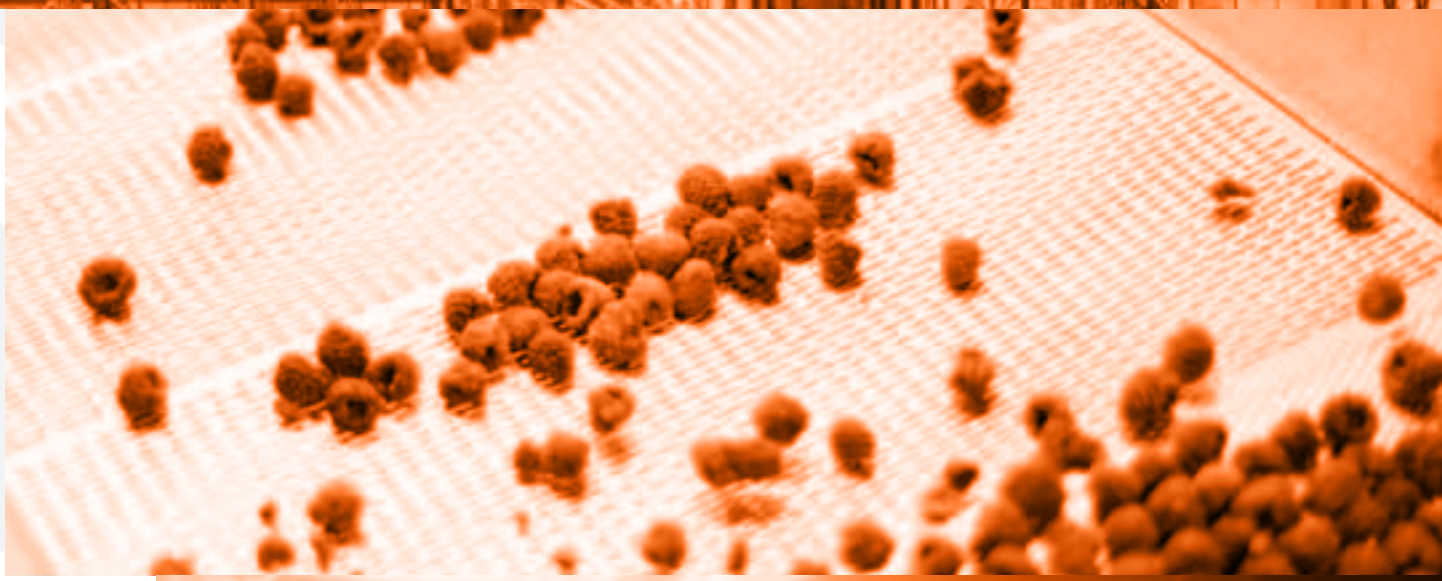

APPLICATIONS

3 ROLLER CHAINS WITH A SPECIAL OFFSET PLATE

WITH ONE OR TWO OPENINGS, MOUNTED ON ONE OR BOTH SIDES

ACCORDING TO PN-77/M-84168, DIN 8187

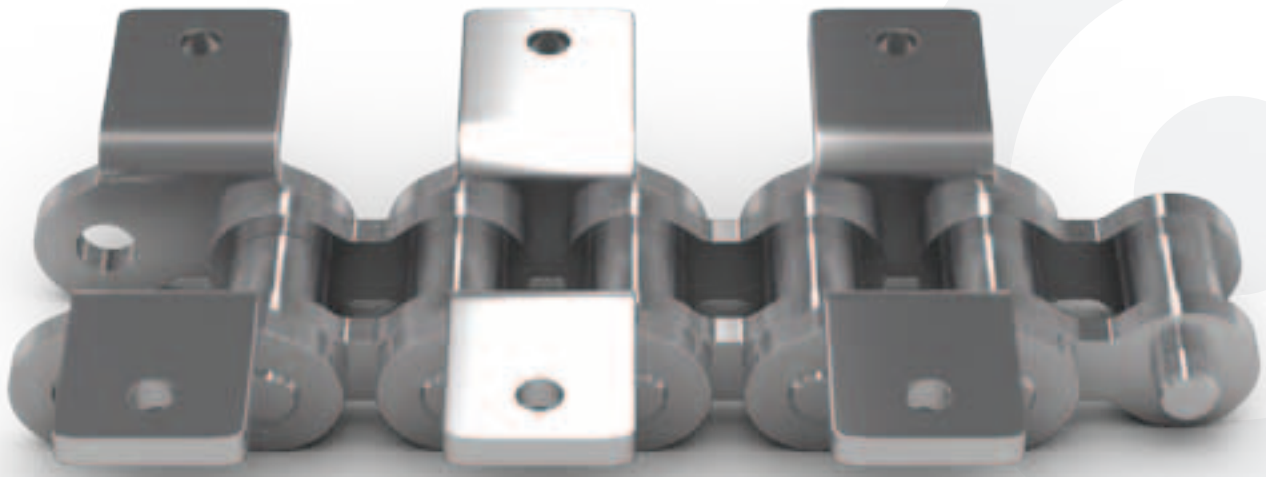

These chains have offset plates with openings designed for mounting additional elements, allowing the chain to be used for the purposes of transporting, scraping, or moving various materials. To respond to the customer's demands, we also design alternative and cost-efficient solutions, thus ensuring the fulfilment of user expectations. Our chains are of high quality and perform well even in the most extreme conditions. We provide these chains in simplex, duplex and triplex versions. They are most commonly used in the food, chemical, pharmaceutical, and agriculture industries.

WITH ONE HOLE

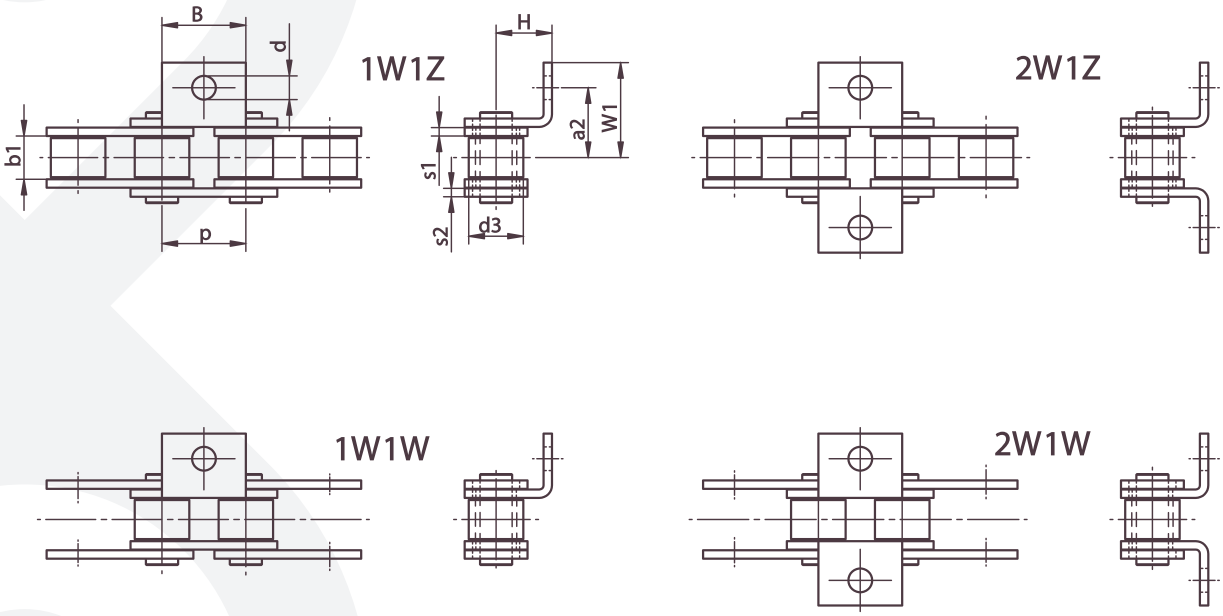

chain	p mm	b1 mm	d3 mm	a2 mm	B mm	s1 mm	s2 mm	d mm	W1 mm	H mm
06B	9,525	5,72	6,35	9,5	8	1,3	1,3	3,5	13,5	6,5
08B	12,7	7,75	8,51	12,7	11	1,6	1,6	4,3	18,2	8,9
10B	15,875	9,65	10,16	14,5	14	1,6	1,6	5,2	19,9	10,5
12B	19,05	11,68	12,07	17,5	18	1,8	1,8	6,2	25,3	12,2
16B	25,4	17,02	15,88	29	26	4	4	9	37,3	18
20B	31,75	19,56	19,05	34	26	4,5	3,5	9,6	44	23,5
24B	38,1	25,4	25,4	38	30	6	5	10	59,7	25
28B	44,45	30,99	27,94	53,5	42	7	6	12	73,5	32
32B	50,8	30,99	29,21	55	50	7	6	14	75,6	37,5
40B	63,5	38,1	39,37	63,5	60	8	8	17	90	40

WITH TWO HOLES

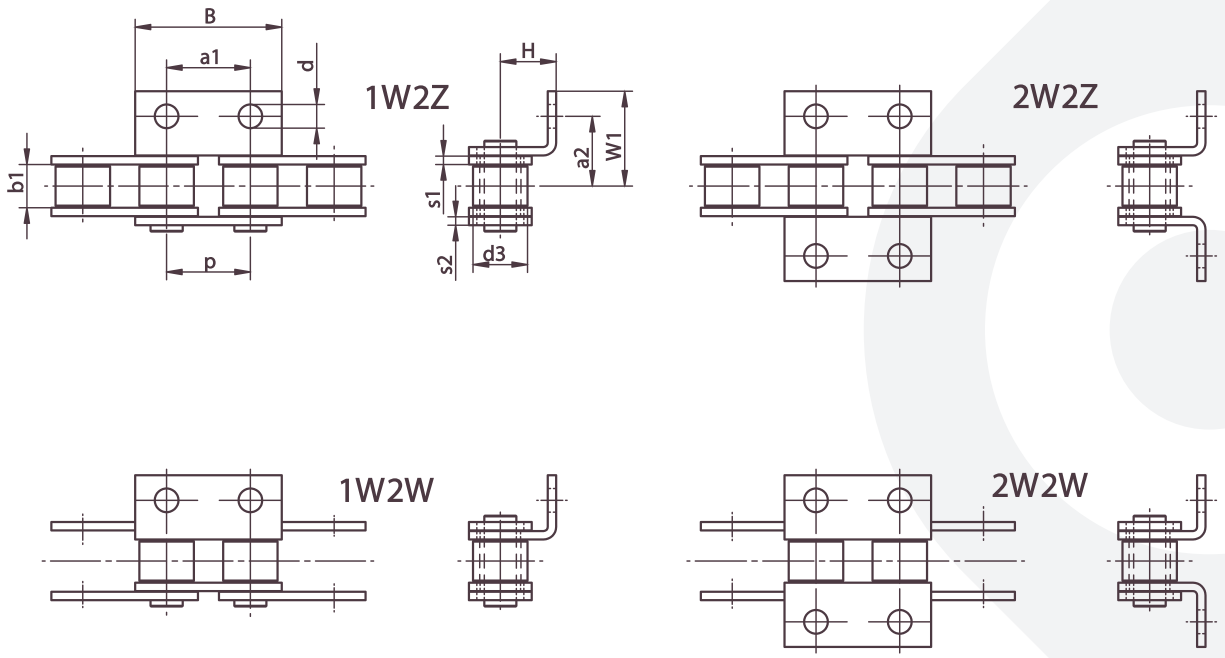

chain	p mm	b1 mm	d3 mm	a1 mm	a2 mm	B mm	s1 mm	s2 mm	d mm	W1 mm	H mm
06B	9,525	5,72	6,35	9,52	9,5	17,32	1,3	1,3	2,8	14,3	6,4
08B	12,7	7,75	8,51	12,7	12,7	24,45	1,6	1,6	4,3	18,2	8,9
10B	15,875	9,65	10,16	15,76	15,2	28,36	1,6	1,6	5,2	19,9	10,5
12B	19,05	11,68	12,07	19	17,5	34,9	1,8	1,8	6,2	25,3	12
16B	25,4	17,02	15,88	25,4	25,1	49	4	4	8,2	36,3	19
20B	31,75	19,56	19,05	31,75	34	57,75	4,5	3,5	9,6	44	23,5
24B	38,1	25,4	25,4	38,1	38	71,1	6	5	10	59,7	25
28B	44,45	30,99	27,94	44,45	53,5	81,05	7	6	12	73,5	32
32B	50,8	30,99	29,21	50,8	55	92,6	7	6	14	75,6	37,5
40B	63,5	38,1	39,37	63,5	63,5	115,5	8	8	17	90	40

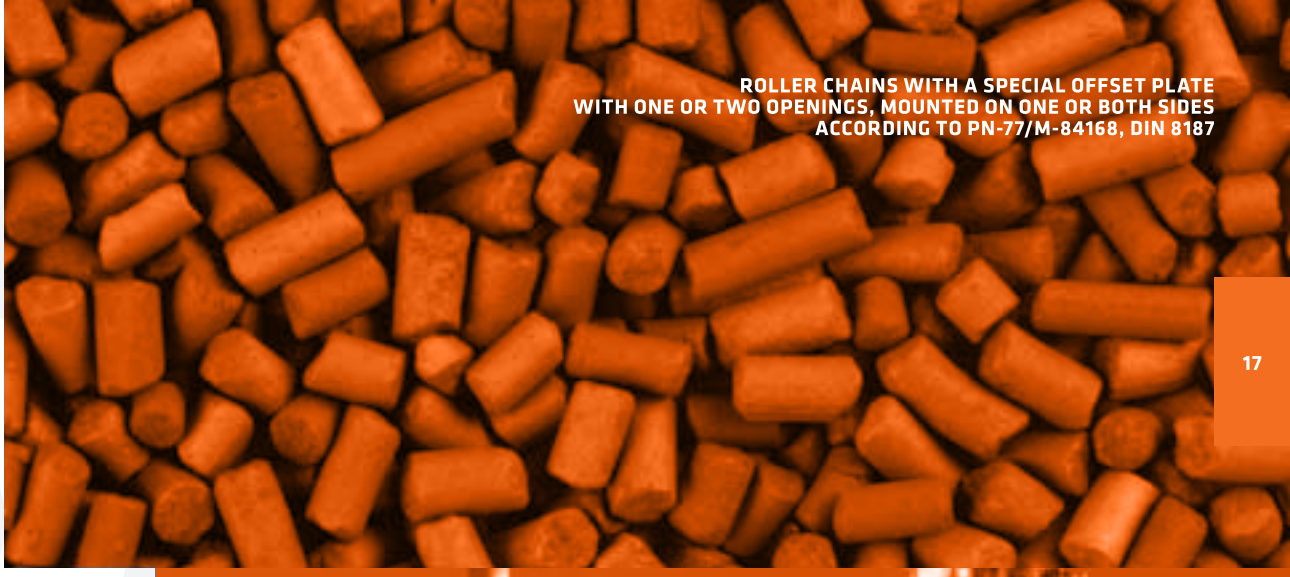

ROLLER CHAINS WITH A SPECIAL OFFSET PLATE
WITH ONE OR TWO OPENINGS, MOUNTED ON ONE OR BOTH SIDES
ACCORDING TO PN-77/M-84168, DIN 8187

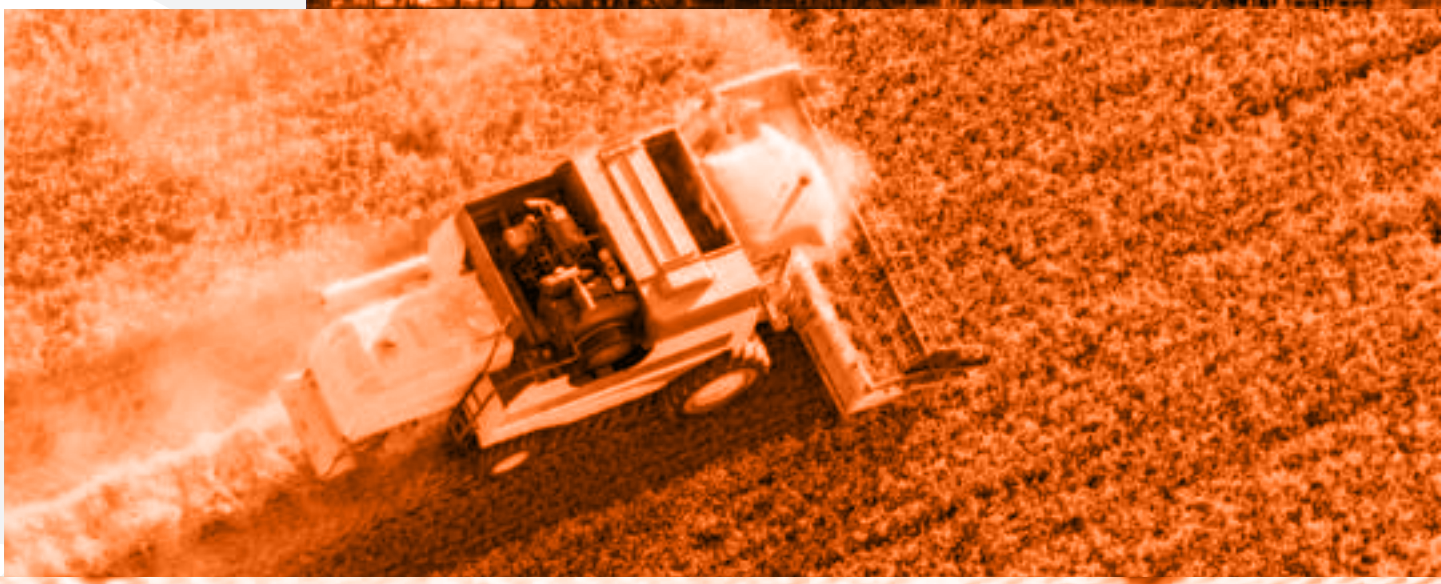

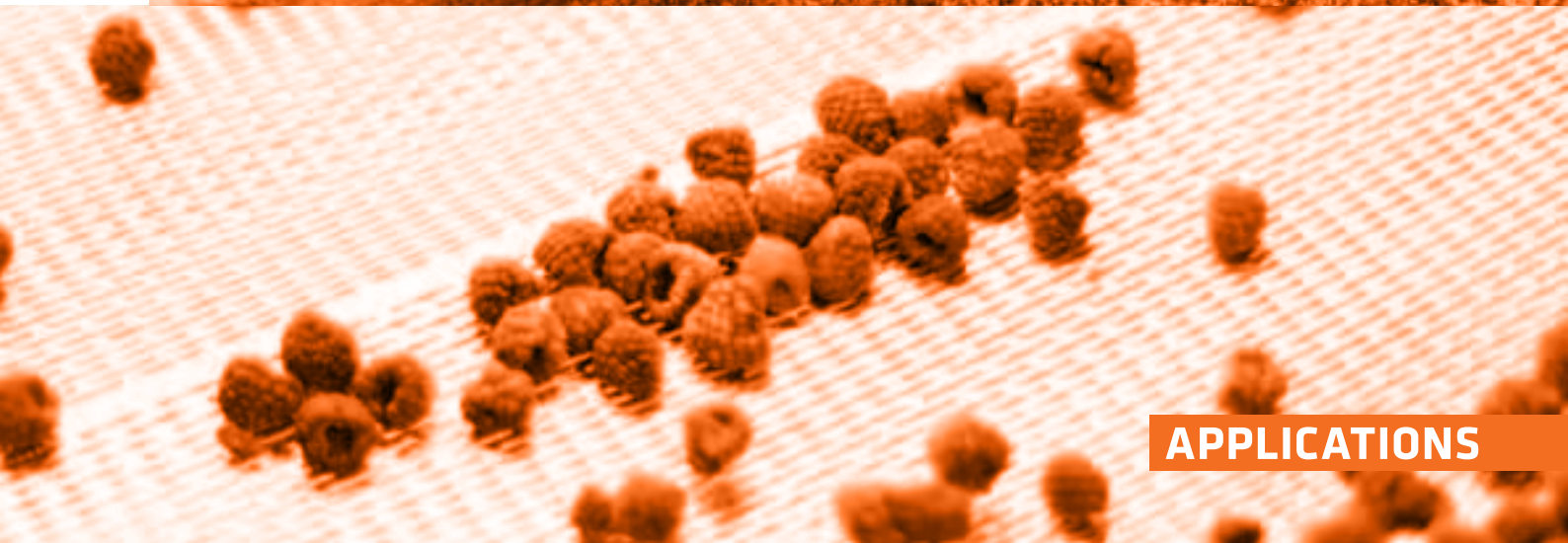

APPLICATIONS

4 ROLLER CHAINS WITH ONE/ TWO-SIDED ELONGATED PINS

ACCORDING TO PN-77/M-84168, DIN 8187

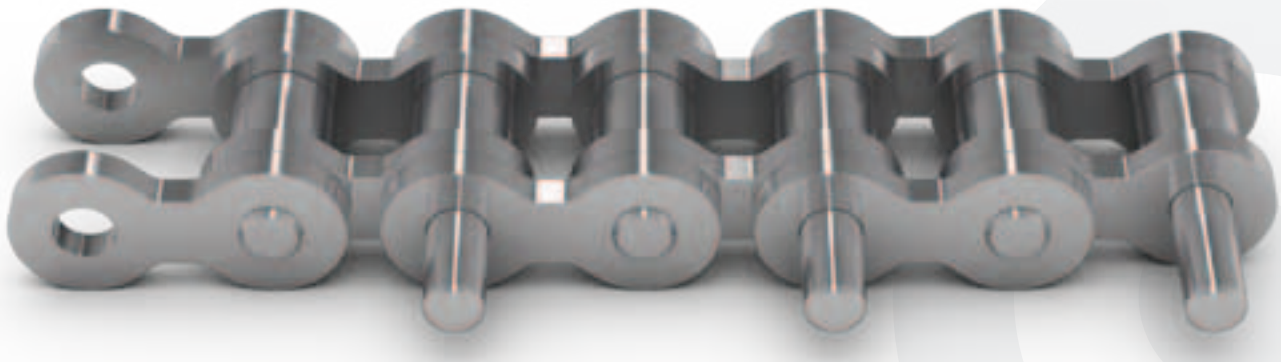

Elongated pin chains are manufactured on the basis of roller chains, while the pins are made in accordance with strictly defined customer requirements regarding the length and number in the chain configuration. Regularly conducted breaking tests allow us to ensure the high quality of these chains. We provide these chains in simplex, duplex and triplex versions. They are most commonly used in the agriculture and food processing industries, and for internal transport in many other sectors of the industry.

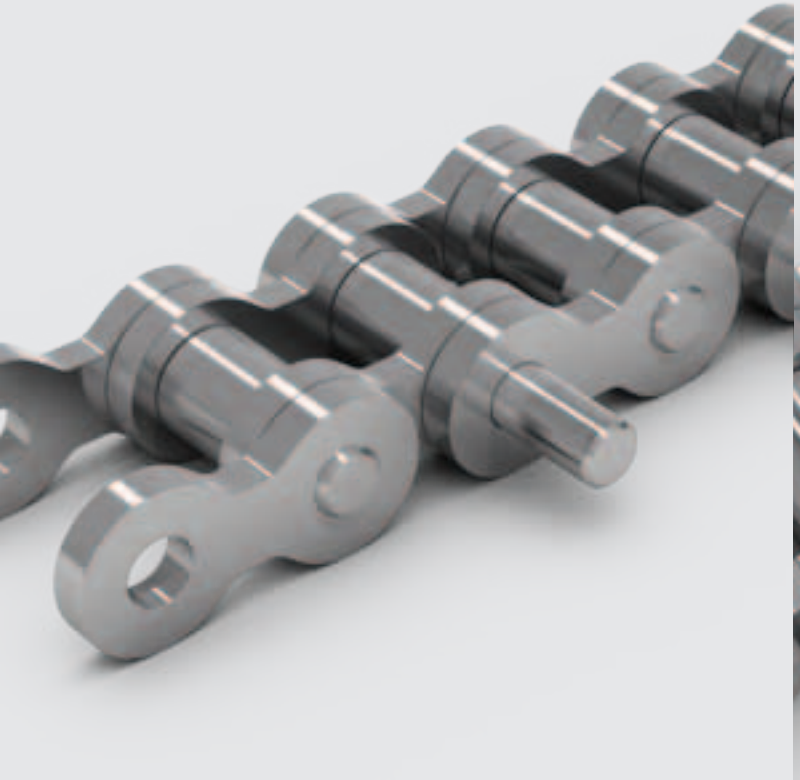

WITH ONE-SIDED ELONGATED PINS

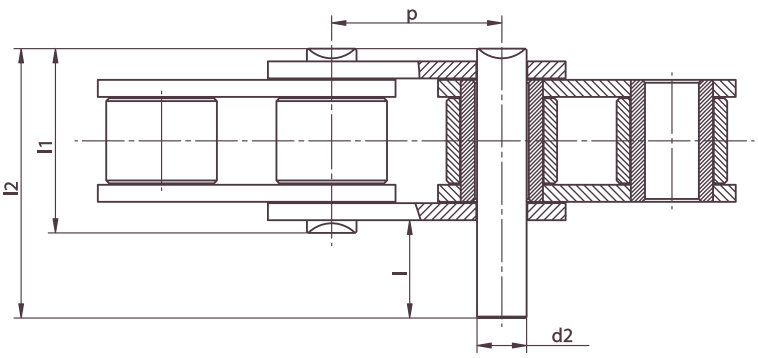

WITH TWO-SIDED ELONGATED PINS

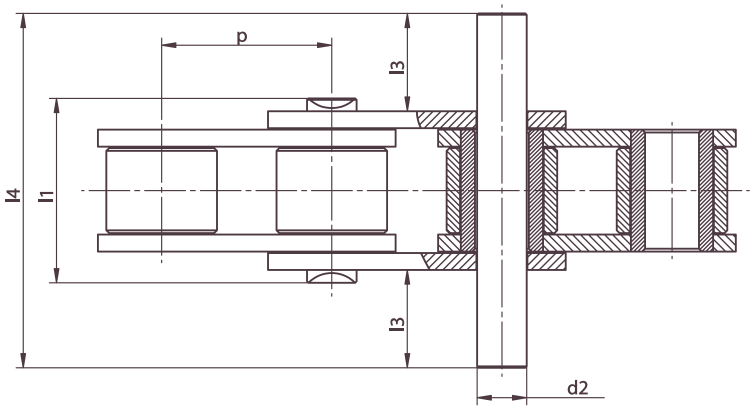

chain	p	d_2	l_1 max	l_2 max	l_4 max	l max	l_3 max
06B-1	9,53	3,28	13,50	23,80	34,00	11,00	
08B-1	12,70	4,45	17,00	31,00	44,90	15,30	
10B-1	15,88	5,08	19,60	36,20	52,80	18,20	
12B-1	19,05	5,72	22,70	42,20	61,70	21,00	
16B-1	25,40	8,28	36,10	68,00	99,90	34,50	18,00
20B-1	31,75	10,19	43,20	79,00	116,00	39,40	20,60
24B-1	38,10	14,63	53,40	101,00	150,00	50,40	26,20

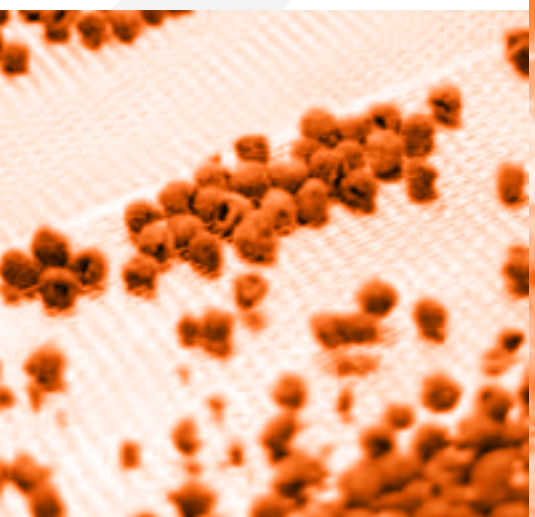

5 BUSH CHAINS

(WITH A METRIC PITCH)

ACCORDING TO PN-78/M-84176

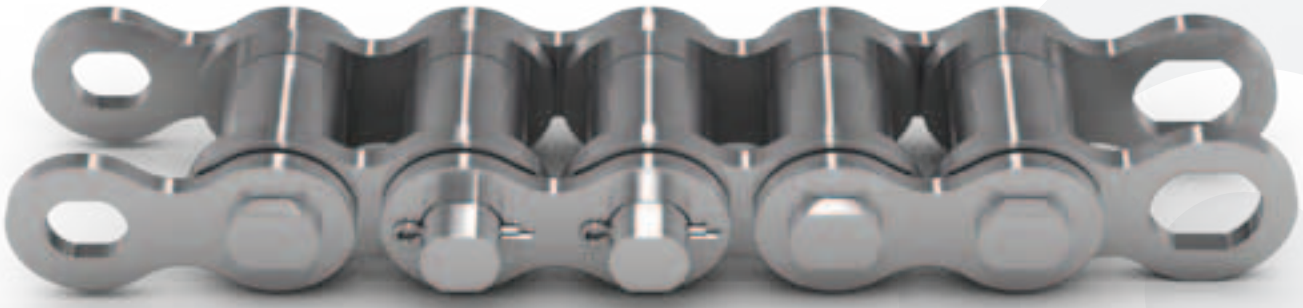

Chains of this type are used for transporting heavy loads in extreme conditions. The high quality of these chains is achieved by means of strict quality control, which ensures continuity of production and trouble-free operation of machinery and equipment. These chains are mainly used in the steel and wood industries, as well as for working in highly contaminated conditions (e.g. steel shavings, sand, etc.).

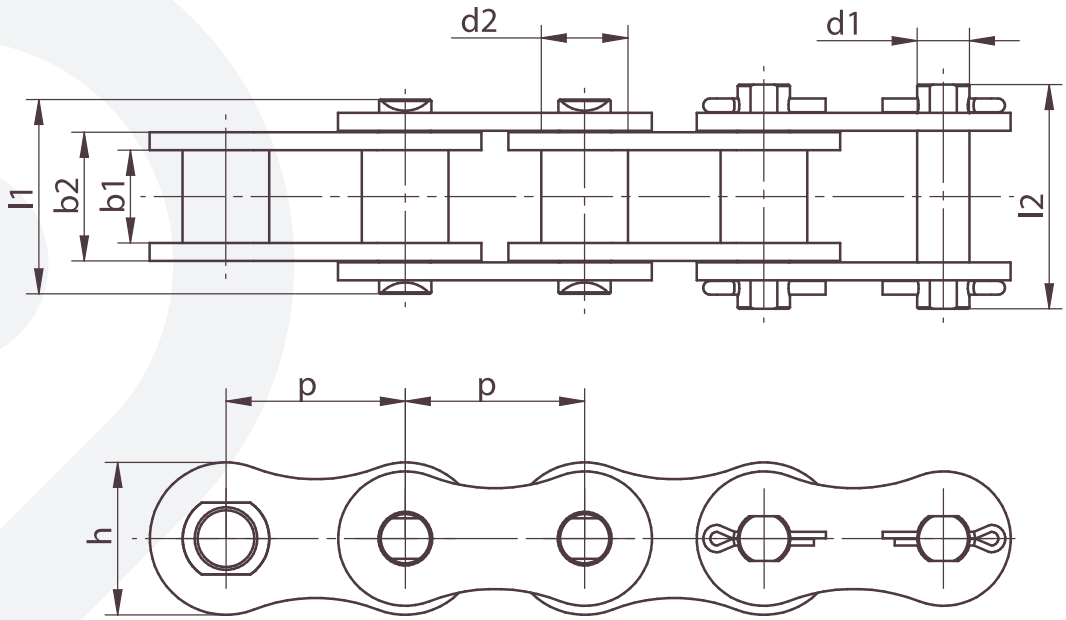

chain	p	b_1 min	b_2 max	d_1	d_2 max	l_1 max	l_2 max	h max	F_BN min	kg/m
M15	15	14	18,5	6	9	26	32	14	12500	1,21
M20	20	16	23,0	8	12	34	38	19	25000	2,15
M25	25	18	25,0	10	15	36	43	24	31500	2,55
M30	30	20	29,0	11	17	43	49	28	40000	4,00
M35	35	22	31,0	12	18	45	54	30	50000	4,30
M40	40	25	36,0	14	20	54	61	35	63000	5,50
M45	45	30	43,0	16	22	64	70	40	80000	7,55
M50	50	35	48,0	18	26	70	79	44	100000	9,04
M55	55	45	63,0	20	30	90	99	48	125000	13,60
M60	60	50	68,0	22	32	96	104	54	160000	14,90
M65	65	55	73,0	26	36	101	113	60	200000	18,90
M70	70	65	87,0	30	42	120	131	66	250000	24,70
M80	80	70	96,0	32	44	134	150	75	315000	31,00
M90	90	80	106,0	36	50	144	160	85	400000	41,80
M100	100	90	116,0	42	56	155	170	95	500000	48,10

6 ROLLER CHAINS TYPE S

ACCORDING TO PN-77/M-84165, DIN-8189

These chains are mainly used in farming machinery (such as grain, corn or currant harvesters, etc.), construction equipment and machines designed for highly contaminated conditions. The chains are checked by our Quality Control Department at each stage of the manufacturing process and a breaking test is conducted as part of quality assurance. In line with our customers' requirements, the materials for chain production are subjected to heat treatment in order to obtain the required hardness. All the actions above ensure that our chains have increased reliability, greater performance and are easy to maintain, which translates into their cost-effectiveness.

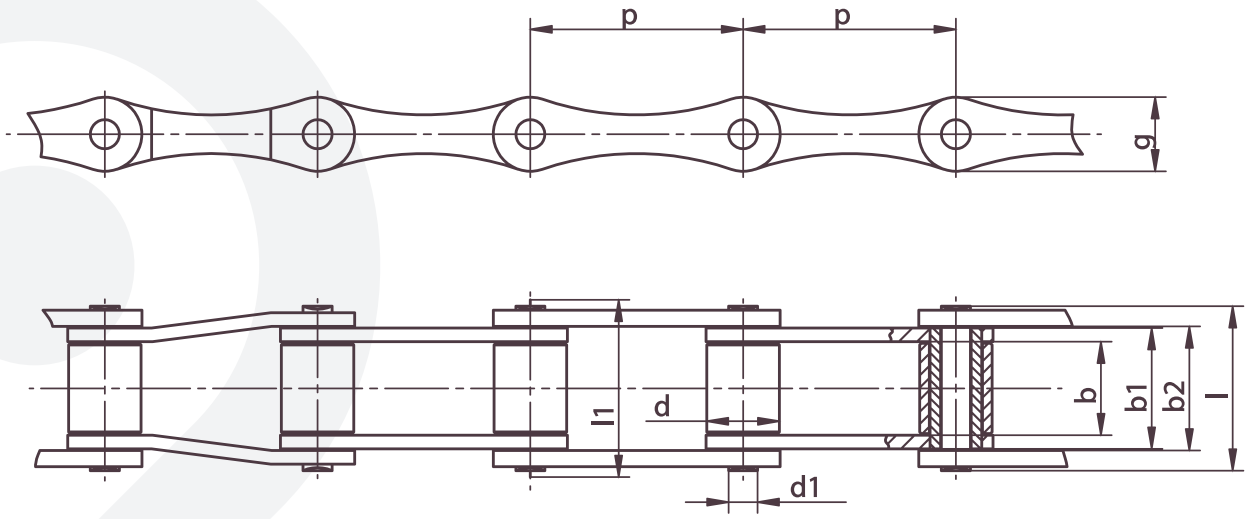

chain	p1 *mm*	d max *mm*	b min *mm*	b2 min *mm*	g max *mm*	d1 max *mm*	b1 max *mm*	l max *mm*	l1 max *mm*	breaking load *N*
S32	29,21	11,43	15,88	20,57	13,5	4,47	20,19	26,7	31,8	820
S42	34,93	14,27	19,05	25,65	19,8	7,01	25,4	34,3	39,4	2730
S45	41,4	15,24	22,23	28,96	17,3	5,74	28,58	38,1	43,2	1820
S52	38,1	15,24	22,23	28,96	17,3	5,74	28,58	38,1	43,2	1820
S55	41,4	17,78	22,23	28,96	17,3	5,74	28,58	38,1	43,2	1820
S62	41,91	19,05	25,4	32	17,3	5,74	31,8	40,6	45,7	2730
S77	58,34	18,26	22,23	31,5	26,2	8,92	31,17	43,2	52,1	4540
S88	66,27	22,86	28,58	37,85	26,2	8,92	37,52	50,8	58,4	4540

7 FLYER CHAINS

OF AN EVEN CONFIGURATION OF PLATES

ACCORDING TO PN-61/M-84110, DIN 8152

AL, LL and LH plate link chains take into account the required load, depending on the particular application. They are most commonly used in forklift trucks, heavy industry and the shipbuilding sector. The chains are checked by our Quality Control Department at each stage of the manufacturing process and a breaking test is conducted as part of quality assurance. In line with our customers' requirements, the materials for chain production are subjected to heat treatment in order to obtain the required hardness. All of these actions ensure that our chains have increased reliability, greater performance and are easy to maintain, which translates into their cost-effectiveness.

TYPE AL

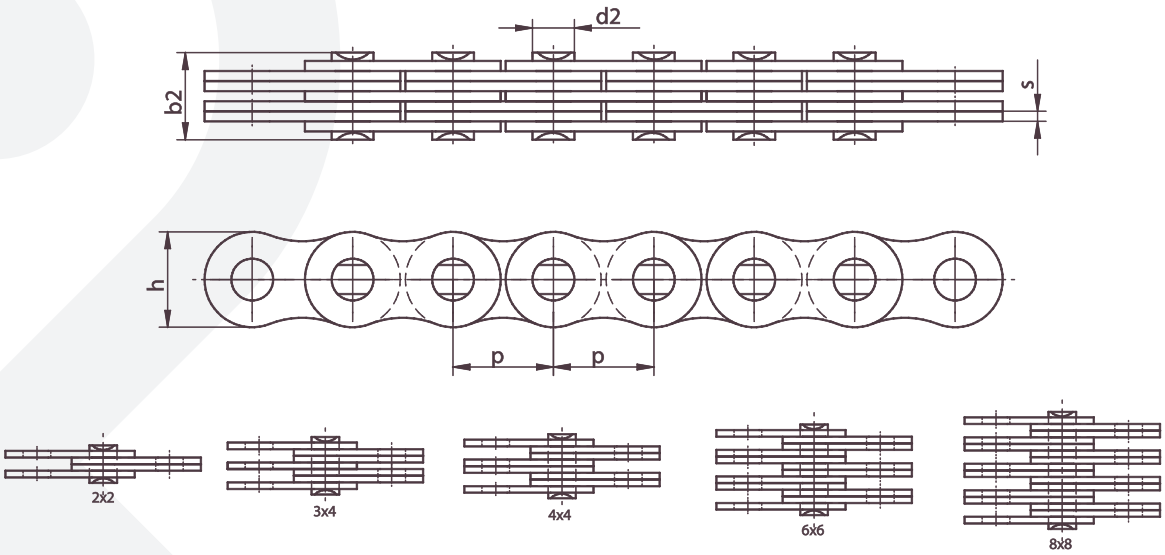

chain	p mm	plates mm	h mm	s mm	d2 mm	b2 mm	breaking load kg	mass kg/m
AL422	12,7	2x2	10,4	1,5	3,96	8,3	14,1	0,39
AL444		4x4				14,4	28,2	0,74
AL466		6X6				20,5	42,3	1,13
AL522	15,875	2x2	12,8	2,03	5,08	11,05	22	0,64
AL534		3x4				17	33	1,1
AL544		4x4				19,4	44	1,25
AL566		6x6				27,5	66	1,79
AL622	19,05	2x2	15,6	2,42	5,94	13	37	0,86
AL644		4x4				22,7	66,7	1,76
AL666		6x6				32,2	100,1	2,6
AL688		8x8				42,2	133,4	3,49
AL822	25,4	2x2	20,5	3,25	7,92	16	56,7	1,54
AL844		4x4				29,4	113,4	3
AL866		6x6				44,2	170	4,45
AL1022	31,75	2x2	25,6	4	9,53	19,6	88,5	2,37
AL1044		4x4				36,4	177	4,68
AL1066		6x6				52,3	265	7,2
AL1088		8x8				68,5	354	9,94
AL1222	38,1	2x2	30,5	4,8	11,1	24,3	127	3,65
AL1244		4x4				43,8	254	7,05
AL1266		6x6				63,2	381	10,5
AL1288		8x8				82,6	508	14,03
AL1444	44,45	4x4	36,4	5,6	12,64	51,3	372,7	10,34
AL1466		6x6				74,56	559	15,16
AL1644	50,8	4x4	41,6	6,4	14,21	58	471	12,98
AL1666		6x6				83,8	706	19,76
AL1688		8x8				109,5	942	25,47

TYPE LH

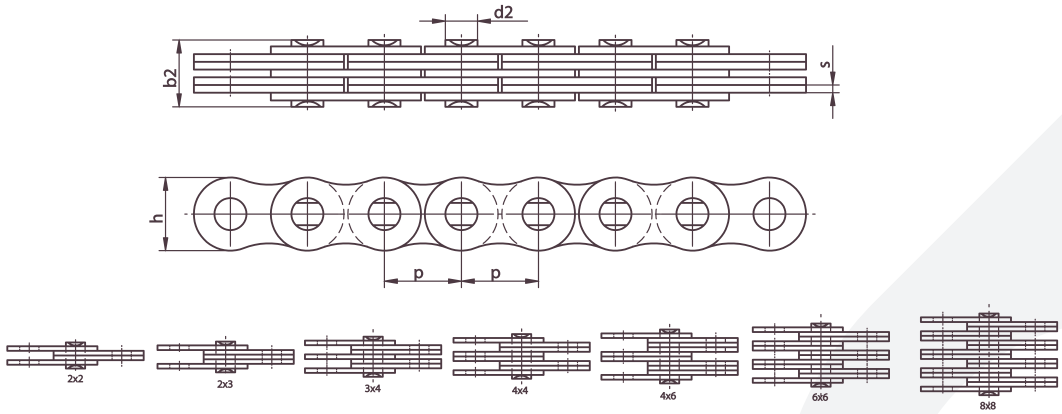

chain	nr ANSI	p mm	plates mm	h mm	s mm	d2 mm	b2 mm	breaking load kg	weight kg/m
LH0822	BL422		2x2				11,05	22,20	0,64
LH0823	BL423		2x3				13,16	22,20	0,80
LH0834	BL434		3x4				17,40	33,40	1,12
LH0844	BL444	12,700	4x4	12,07	2,08	5,09	19,51	44,50	1,28
LH0846	BL446		4X6				23,75	44,50	1,60
LH0866	BL466		6x6				27,99	66,70	1,92
LH0888	BL488		8x8				36,45	89,00	2,56
LH1022	BL522		2x2				12,90	33,40	0,88
LH1023	BL523		2x3				15,37	33,40	1,10
LH1034	BL534		3x4				20,32	48,90	1,50
LH1044	BL544	15,875	4X4	15,09	2,44	5,96	22,78	66,70	1,80
LH1046	BL546		4x6				27,74	66,70	2,20
LH1066	BL566		6x6				32,69	100,10	2,65
LH1088	BL588		8x8				42,57	133,40	3,50
LH1222	BL622		2x2				17,37	48,90	1,45
LH1223	BL623		2X3				20,73	48,90	1,80
LH1234	BL634		3x4				27,43	75,60	2,50
LH1244	BL644	19,050	4x4	18,11	3,3	7,94	30,78	97,90	2,90
LH1246	BL646		4x6				37,49	97,90	3,60
LH1266	BL666		6x6				44,20	146,70	4,30
LH1288	BL688		8x8				57,61	195,70	5,80
LH1622	BL822		2x2				21,34	54,50	2,20
LH1623	BL823		2x3				25,48	84,50	2,70
LH1634	BL834		3x4				33,76	129,00	3,80
LH1644	BL844	25,400	4x4	24,13	4,09	9,54	37,90	169,00	4,30
LH1646	BL846		4x6				46,18	169,00	5,40
LH1666	BL866		6x6				54,46	253,60	6,50
LH1688	BL888		8x8				71,02	338,10	8,60
LH2022	BL1022		2x2				25,37	115,60	3,40
LH2023	BL1023		2x3				30,33	115,60	4,30
LH2034	BL1034		3x4				40,23	182,40	6,00
LH2044	BL1044	31,750	4X4	30,18	4,9	11,11	45,19	231,30	6,90
LH2046	BL1046		4x6				55,09	231,30	8,60
LH2066	BL1066		6x6				65,00	347,00	10,30
LH2088	BL1088		8x8				84,81	462,60	13,80

chain	nr ANSI	p mm	plates mm	h mm	s mm	d2 mm	b2 mm	breaking load kg	weight kg/m
LH2422	BL1222		2x2				29,62	151,20	4,60
LH2423	BL1223		2x3				35,43	151,20	5,80
LH2434	BL1234		3x4				47,04	244,60	8,10
LH2444	BL1244	38,100	4x4	36,2	5,77	12,71	52,88	302,40	9,30
LH2446	BL1246		4x6				64,52	302,50	11,60
LH2466	BL1266		6X6				76,15	453,70	13,90
LH2488	BL1288		8x8				99,42	605,00	18,60
LH2822	BL1422		2x2				33,55	191,30	6,10
LH2823	BL1423		2x3				40,16	191,30	7,60
LH2834	BL1434		3x4				53,37	315,80	10,60
LH2844	BL1444	44,450	4x4	42,24	6,55	14,29	59,97	382,60	12,20
LH2846	BL1446		4x6				73,18	382,60	15,20
LH2866	BL1466		6x6				86,39	578,30	18,20
LH2888	BL1488		8x8				112,80	765,10	24,30
LH3222	BL1622		2x2				39,01	289,10	8,00
LH3223	BL1623		2x3				46,58	289,10	10,00
LH3234	BL1634		3x4				61,72	440,40	14,90
LH3244	BL1644	50,800	4x4	18,26	7,52	17,46	69,29	578,30	16,00
LH3246	BL1646		4x6				84,43	578,30	20,00
LH3266	BL1666		6x6				99,57	857,40	24,00
LH3288	BL1688		8X8				129,84	1 156,50	32,00
LH4022	BL2022		2x2				51,74	433,70	15,80
LH4023	BL2023		2x3				61,70	433,70	19,80
LH4034	BL2034		3x4				81,61	649,40	27,70
LH4044	BL2044	63,500	4x4	60,33	9,91	23,81	91,57	867,40	31,60
LH4046	BL2046		4x6				111,48	867,40	39,50
LH4066	BL2066		6x6				131,39	1 301,10	47,40
LH4088	BL2088		8x8				171,22	1 734,80	63,20

TYPE LL

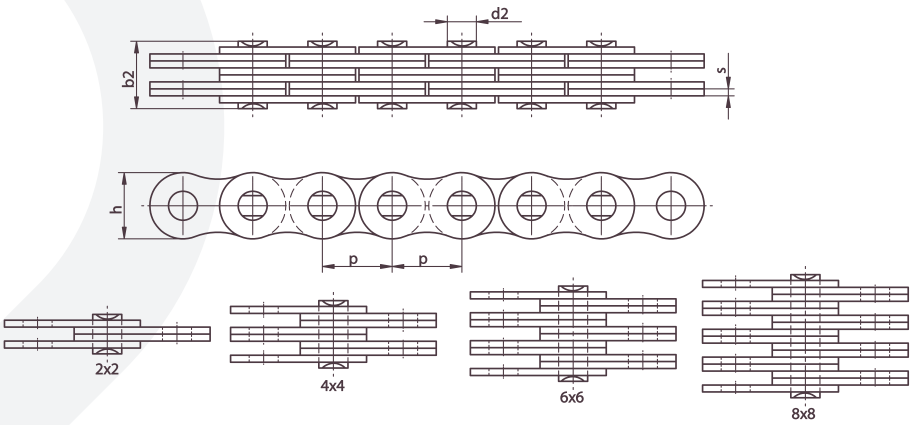

chain	p mm	plates mm	h mm	s mm	d2 mm	b2 mm	breaking load kg	weight kg/m
LL0822	12,7	2x2	10,60	1,30	4,45	7,60	17,80	0,35
LL0844		4x4				15,60	36,40	0,84
LL0866		6x6				18,20	44,50	1,00
LL0888		8x8				23,60	62,20	1,33
LL1022	15,875	2x2	13,70	1,60	5,08	9,20	22,30	0,54
LL1044		4x4				15,80	44,50	1,06
LL1066		6X6				22,10	66,70	1,57
LL1088		8x8				28,80	89,00	2,10
LL1222	19,05	2x2	16,00	1,85	5,72	10,40	28,90	0,73
LL1244		4x4				17,90	57,80	1,44
LL1266		6x6				25,40	86,70	2,15
LL1288		8X8				32,90	115,60	2,84
LL1622	25,4	2x2	21,00	3,10	8,28	17,20	58,00	1,52
LL1644		4x4				29,60	116,00	2,90
LL1666		6x6				42,40	174,00	4,30
LL1688		8x8				54,90	232,00	5,71
LL2022	31,75	2x2	26,40	3,70	10,19	20,10	95,00	2,33
LL2044		4x4				33,80	190,00	4,40
LL2066		6x6				50,10	285,00	6,79
LL2088		8x8				64,00	380,00	8,90

chain	p mm	plates mm	h mm	s mm	d2 mm	b2 mm	breaking load kg	weight kg/m
LL2422	38,1	2x2	33,40	5,00	14,63	28,40	170,00	4,47
LL2444		4x4				46,30	340,00	8,22
LL2466		6x6				66,40	510,00	12,22
LL2488		8x8				86,60	680,00	16,30
LL2822	44,45	2x2	37,08	6,00	15,9	32,20	200,00	5,10
LL2844		4x4				56,40	400,00	9,90
LL2866		6X6				80,80	600,00	14,60
LL2888		8x8				105,20	800,00	19,40
LL3222	50,8	2x2	42,00	6,00	17,81	33,20	260,00	5,80
LL3244		4x4				56,60	520,00	12,30
LL3266		6x6				80,80	780,00	18,30
LL3288		8x8				105,00	1 050,00	24,00
LL4022	63,5	2x2	52,76	8,25	22,89	44,70	360,00	10,30
LL4044		4x4				77,90	780,00	20,00
LL4066		6x6				111,10	1 080,00	30,00
LL4088		8x8				145,50	1 560,00	39,10
LL4822	76,2	2x2	63,88	10,30	29,24	56,10	560,00	18,55
LL4844		4x4				97,40	1 120,00	35,70
LL4866		6x6				138,90	1 168,00	53,00
LL4888		8x8				182,40	2 240,00	70,40

8 GALL'S CHAINS

ACCORDING TO PN-74/M-84110, DIN 8150

These chains are divided into two categories: L (light) and C (heavy), depending on the breaking load. All our chains are manufactured in Poland using high quality attested materials. The chains are checked by our Quality Control Department at each stage of the manufacturing process. Therefore our chains have increased reliability, greater performance and are easy to maintain, which translates into their cost-effectiveness. Customers who choose our chains can be sure of the repeatability of their excellent workmanship. They are use in such areas as machine construction, mining, etc.

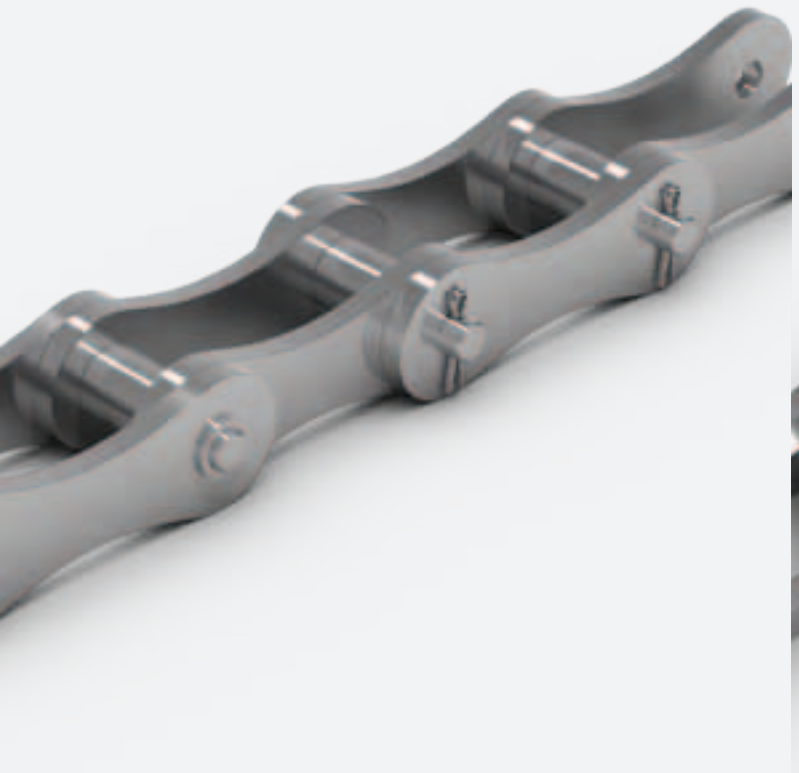

LIGHT VERSION - TYPE L

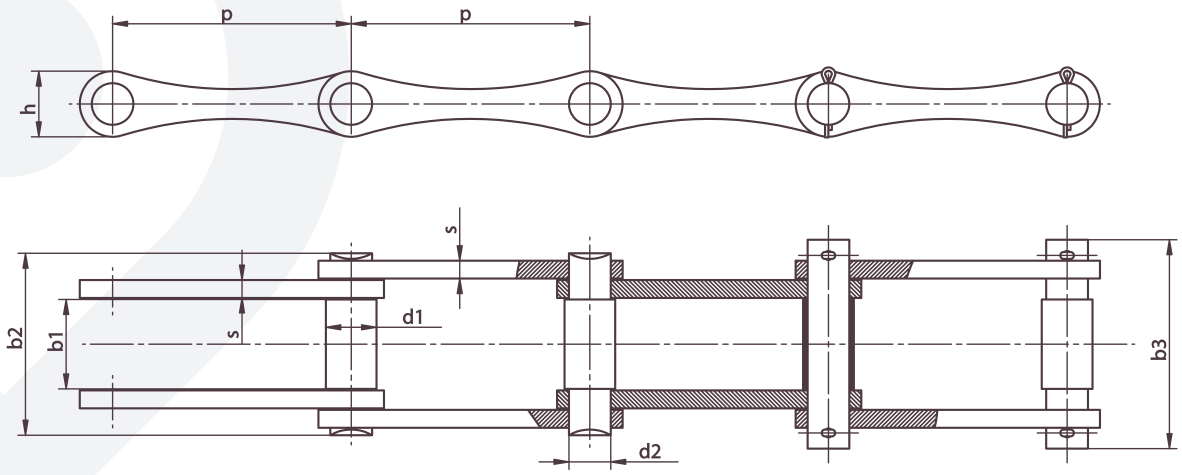

p mm	b1 mm	b2 mm	b3 mm	d1 mm	d2 mm	h mm	s mm	breaking load kg	waga kg/m
20	8	17	19	4	3	5	1,50	2,50	0,23
25	12	21	24	5	4	5	2,00	5,00	0,35
35	15	27	32	8	6	9	2,00	12,50	0,69
40	18	35	41	10	8	10	3,00	25,00	1,25
50	20	50	57	11	9	13	6,00	40,00	2,76
60	22	52	60	12	10	17	6,00	60,00	3,14
70	25	57	65	14	12	19	6,00	80,00	3,31
80	30	62	69	17	14	22	6,00	100,00	4,5

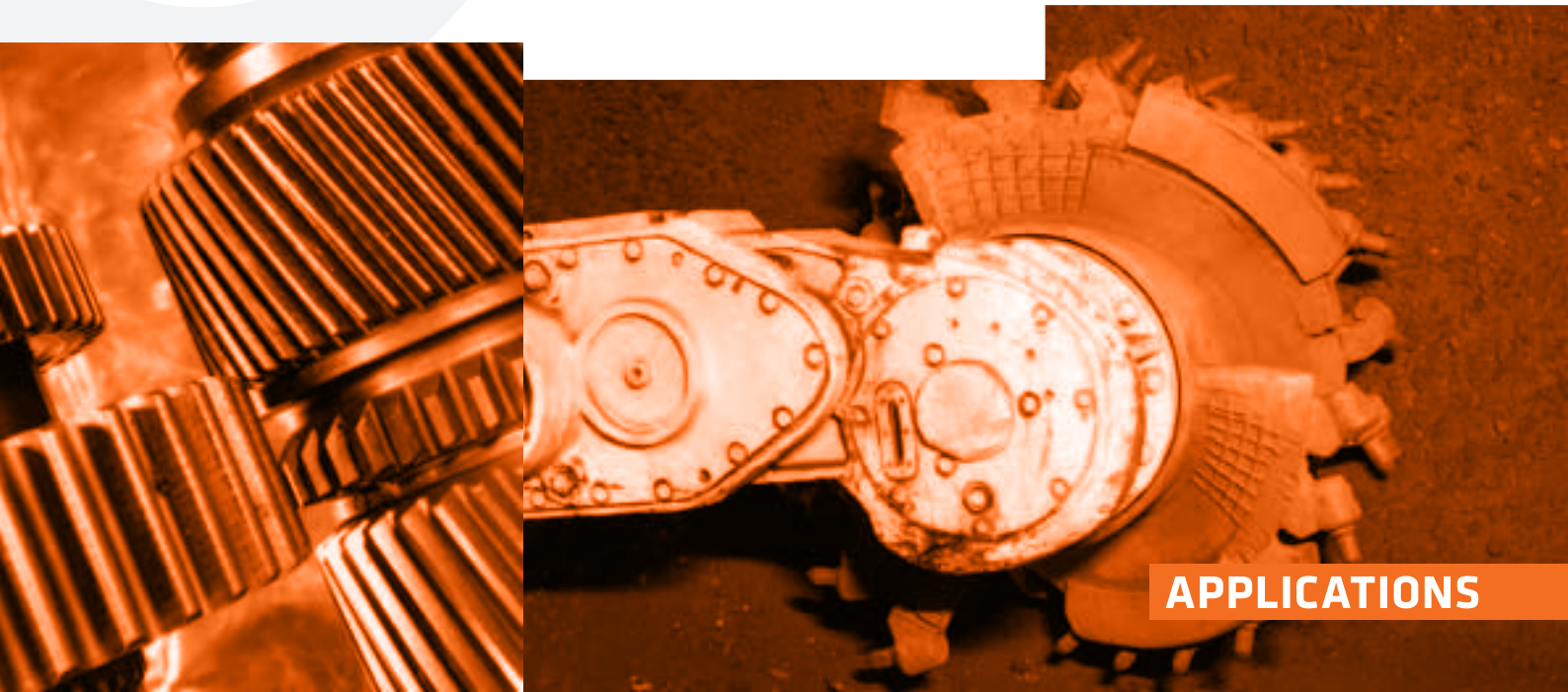

HEAVY VERSION - TYPE C

RIVETED WITHOUT ROVES

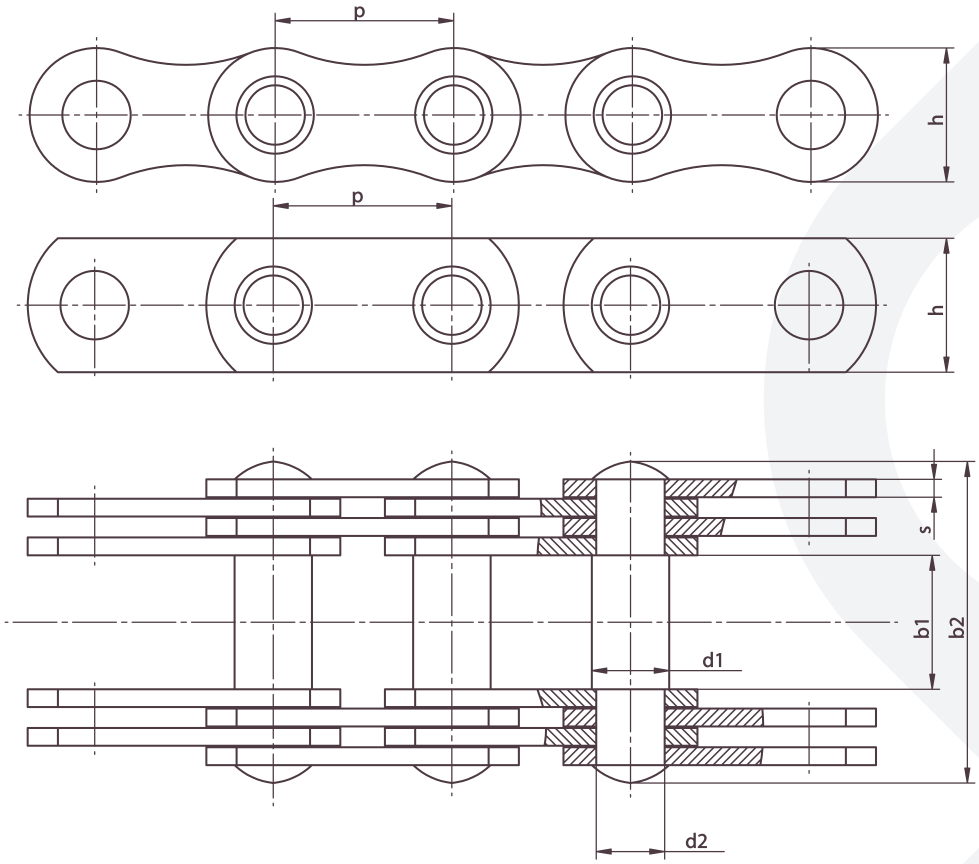

p *mm*	b1 *mm*	b2 *mm*	d1 *mm*	d2 *mm*	h *mm*	s *mm*	plates	breaking load *kg*	weight *kg/m*
6	4	11	3,0	2,5	5	2	2	125	0,16
8	6	13	3,5	2,5	7	2	2	150	0,25
10	8	18	4,0	3,0	8	2	2	250	0,40
15	12	25	5,0	4,0	12	2	2	500	0,70
20	15	28	8,0	6,0	15	2	2	1250	1,00
25	18	36	10,0	8,0	18	3	2	2500	1,75
30	20	51	11,0	9,0	20	3	4	4000	3,40
35	22	53	12,0	10,0	26	3	4	6000	4,50
40	25	59	14,0	12,0	30	3	4	8000	4,70
45	30	63	17,0	14,0	35	3	4	10000	6,40

RIVETED WITH ROVES

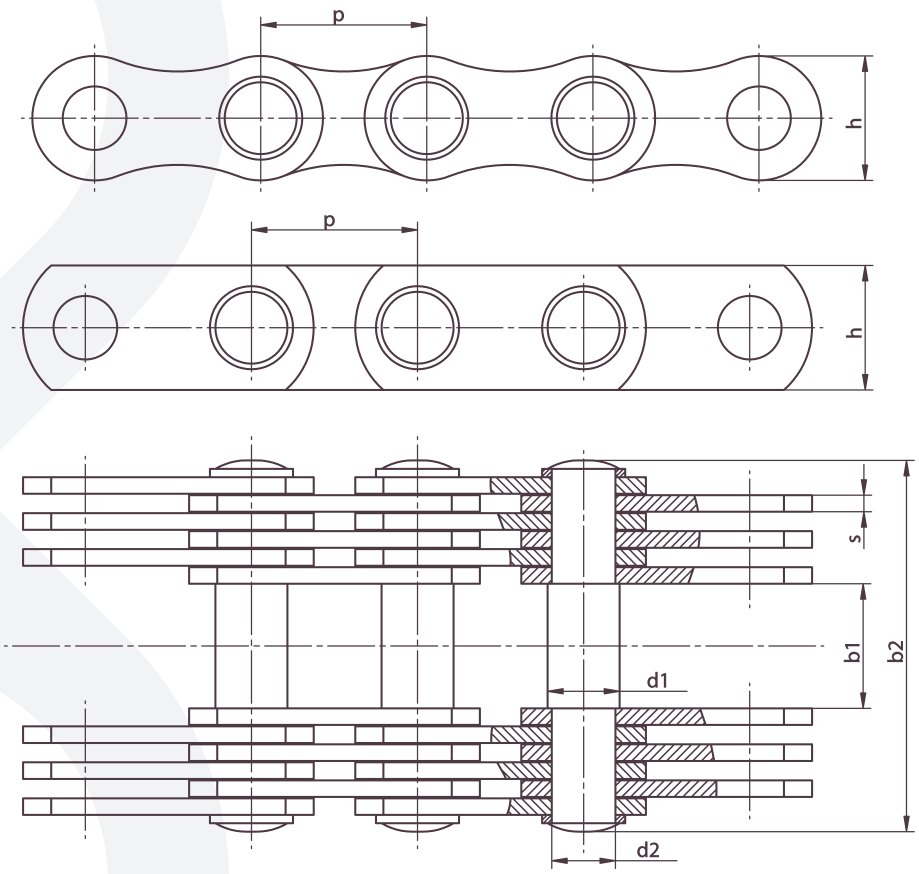

p *mm*	b1 *mm*	b2 *mm*	d1 *mm*	d2 *mm*	h *mm*	s *mm*	plates	breaking load *kg*	weight *kg/m*
50	35	90	22	18	38	4,5	4	15000	10,60
55	40	108	24	21	40	6,0	4	20000	15,50
60	45	114	26	23	45	6,0	4	23000	18,00
70	50	148	32	28	55	6,0	6	37500	33,50
80	60	159	36	32	60	6,0	6	50000	38,20
90	70	184	40	36	70	7,0	6	75000	53,00
100	80	224	45	40	80	8,0	8	100000	76,60
110	90	236	50	45	90	8,0	8	125000	90,00
120	100	262	55	50	100	8,0	8	150000	112,00
140	120	342	60	55	120	8,0	10	200000	150,00
170	145	405	70	65	130	10,0	10	250000	210,00
200	170	450	85	80	16	10,0	10	300000	305,00

9 CONVEYOR CHAINS

SOLID PIN TYPE

ACCORDING TO PN-71/M-84186, DIN 8165

Chains of this type are used in many kinds of sorting machines and in conveyors designed for operating in highly contaminated conditions. All our chains are manufactured in Poland using high quality attested materials. The chains are checked by our Quality Control Department at each stage of the manufacturing process. In line with our customers' requirements, the materials for chain production are subjected to heat treatment in order to obtain the desired hardness. Customers who choose our chains can be sure of the repeatability of their excellent workmanship.

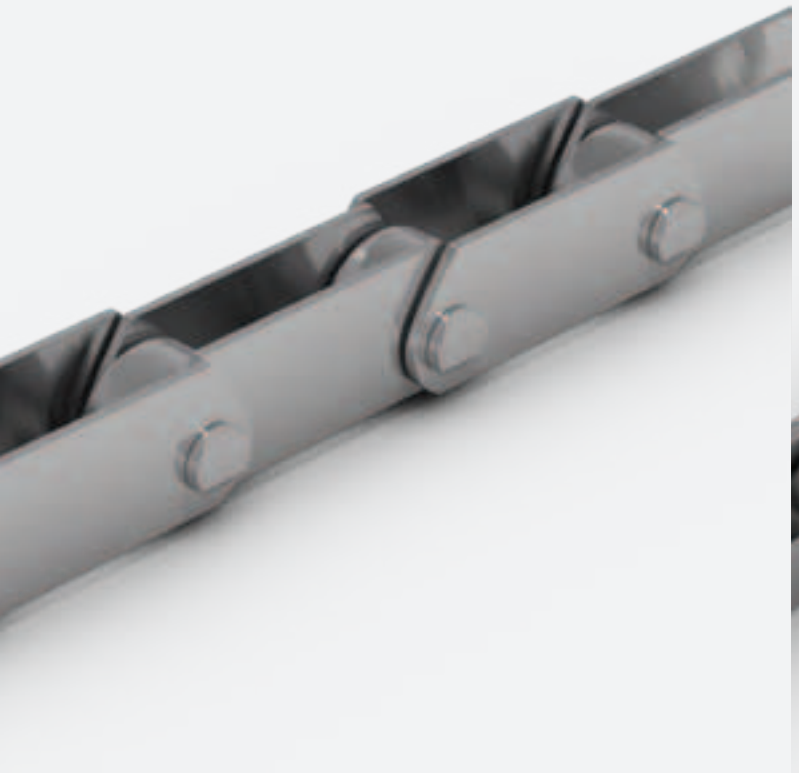

TYPE FVT

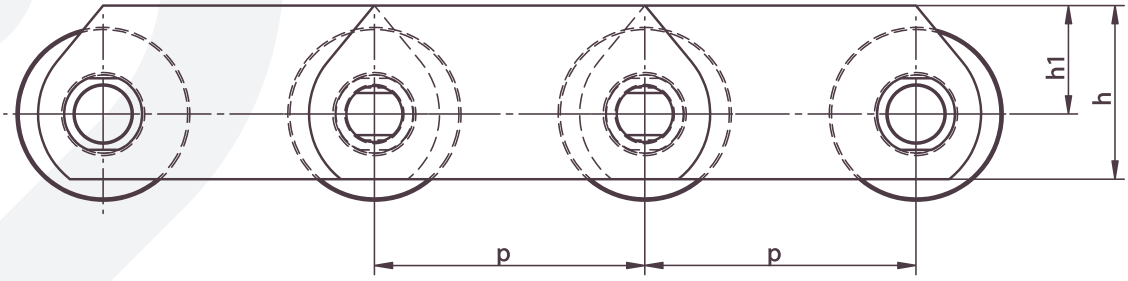

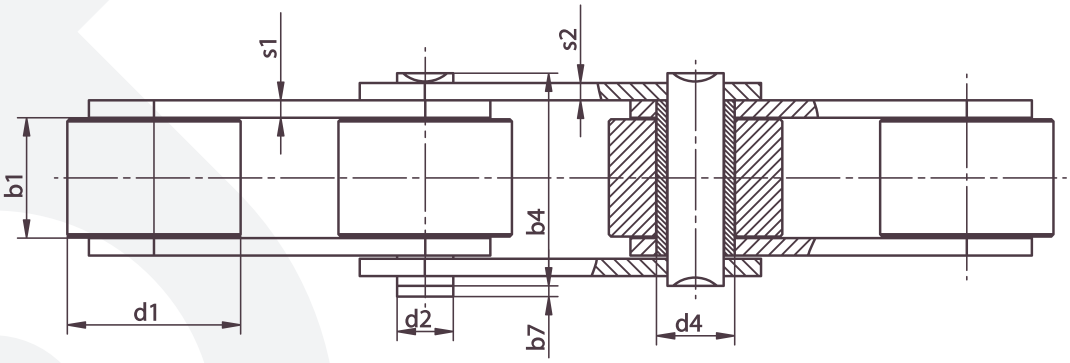

chain	p mm						b1 mm	d2 mm	d4 mm	d1 mm	h mm	h1 mm	S1, S2 mm	b4 mm	b4 +b7 mm	obciążenie zrywające N
FVT 40	40	63	100				18	10	15	32	35	22	3	37	44	40 000
FVT 63	50	63	100	125	160		22	12	18	40	40	25	4	46	55	63 000
FVT 90	63	100	125	160	200	250	25	14	20	48	45	27,5	5	53	62	90 000
FVT 112	100	125	160	200	250		30	16	22	55	50	30	6	63	72	112 000
FVT 140	100	125	160	200	250	315	35	18	26	60	6	37,5	6	68	80	140 000
FVT 180	125	160	200	250	315	400	45	20	30	7	70	45	8	86	100	180 000
FVT 250	125	160	200	250	315	400	55	26	36	80	80	50	8	98	114	250 000
FVT 315	160	200	250	315	400		65	30	42	90	90	55	10	117	133	315 000
FVT 400	160	200	250	315	400		70	32	44	100	90	55	12	131	151	400 000
FVT 500	160	200	250	315	400	500	80	36	50	110	100	60	12	141	161	500 000
FVT 630	200	250	315	400	500		90	42	56	120	120	70	12	153	173	630 000

TYPE FV

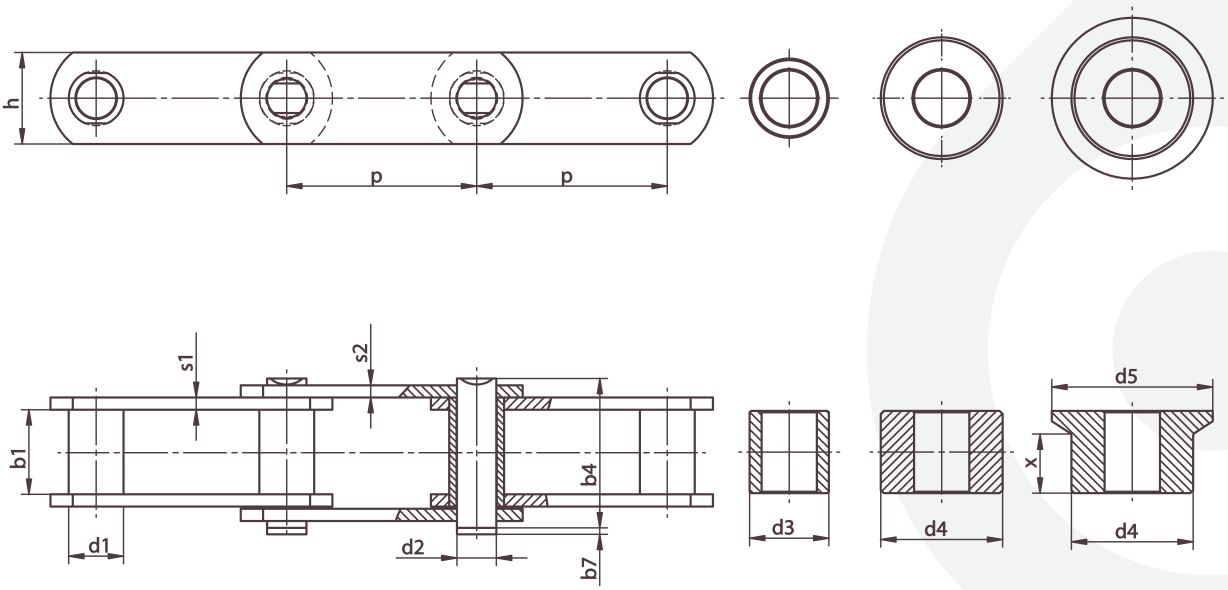

chain	p mm							b1 mm	d2 mm	d1 mm	d3 mm	d4 mm	d5 mm	x mm	h mm	s1, s2 mm	b4 mm	b4 +b7 mm	breaking load N
FV 40	40	63	100	125				18	10	15	20	32	48	12	26	3	37	44	40 000
FV 63	50	63	100	125	160	200		22	12	18	26	40	60	15	30	4	46	55	63 000
FV 90	63	100	125	160	200	250		24	14	20	30	48	73	18	35	5	53	62	90 000
FV 112	80	100	125	160	200	250		30	16	22	32	55	87	21,5	40	6	63	72	112 000
FV 140	80	100	125	160	200	250	315	35	18	26	36	60	95	25	45	6	68	80	140 000
FV 180	100	125	160	200	250	315	400	45	20	30	42	70	120	34	50	8	86	100	180 000
FV 250	100	125	160	200	250	315	400	55	26	36	50	80	145	40	60	8	98	114	250 000
FV 315	125	160	200	250	215	400	500	65	30	42	60	90	170	48	70	10	117	133	315 000
FV 400	160	200	250	315	400	500		70	32	44	60	100	185	52	70	12	131	151	400 000
FV 500	160	200	250	315	400	500		80	36	50	70	110	195	57	80	12	141	161	500 000
FV 630	200	250	315	400	500			90	42	56	80	120	210	62	100	12	153	173	630 000

TYPE M

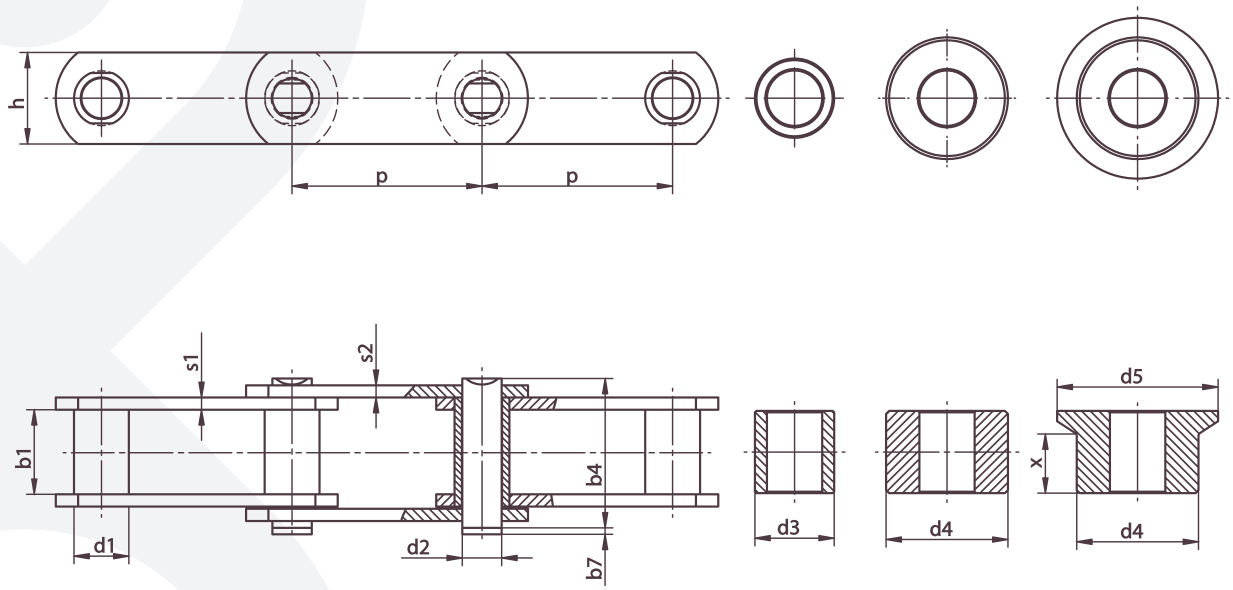

chain	p mm							b1 mm	d2 mm	d1 mm	d3 mm	d4 mm	d5 mm	x mm	h mm	s1, s2 mm	b4 mm	b4 +b7 mm	breaking load N
M 20	40	50	63	80	100	125	160	16	6	9	12,5	25	30	11	18	2,5	31,5	31,5	20 000
M 28	50	63	80	100	125	160	200	18	7	10	15	30	36	12,5	20	3	36	36	28 000
M 40	63	80	100	125	160	200	250	20	8,5	12,5	18	36	42	13,5	25	3,5	40,5	40,5	40 000
M 56	63	80	100	125	160	200	250	24	10	15	21	42	50	17	30	4	47	47	56 000
M 80	80	100	125	160	200	250	315	28	12	18	25	50	60	20	35	5	57	57	80 000
M 112	80	100	125	160	200	250	315	32	15	21	30	60	70	22	40	6	65	65	112 000
M 160	100	125	160	200	250	315	400	37	18	25	36	70	85	25,5	50	7	75	75	160 000
M 224	125	160	200	250	315	400	500	43	21	30	42	85	100	30	60	8	88	88	224 000
M 315	160	200	250	315	400	500	630	48	25	36	50	100	120	33	70	10	100	100	315 000
M 450	200	250	215	400	500	630	800	56	30	42	60	120	140	37	80	12	116	116	450 000
M 630	250	315	400	500	630	800	1000	66	36	50	70	140	170	45	100	14	140	140	630 000
M 900	250	315	400	500	630	800	1000	78	44	60	85	170	210	52	120	16	164	164	900 000

TYPE MT

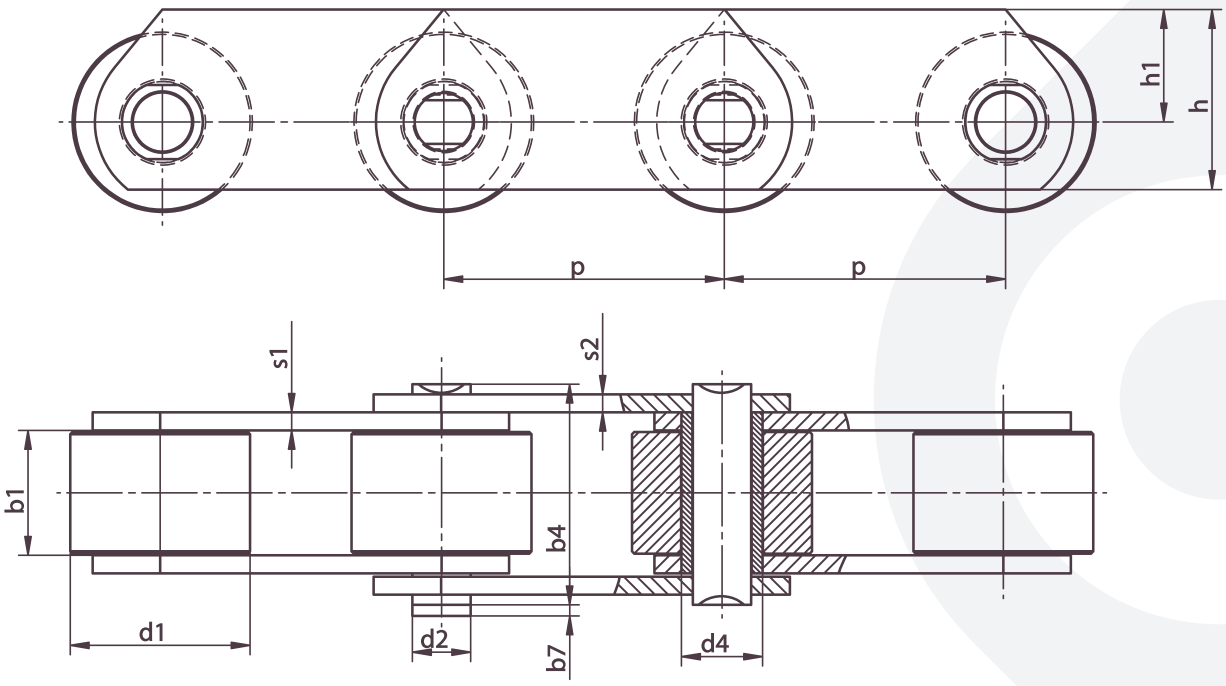

chain	p mm							b1 mm	d2 mm	d4 mm	d1 mm	h mm	h1 mm	s1, s2 mm	b4 mm	b4 +b7 mm	breaking load N
MT 20	40	50	63	80	100	125	160	16	6	9	25	25	16	2,5	31,5	35	20 000
MT 28	50	63	80	100	125	160	200	18	7	10	30	30	20	3	36	43	28 000
MT 40	63	80	100	125	160	200	250	20	8,5	12,5	36	35	22,5	3,5	40,5	49	40 000
MT 56	63	80	100	125	160	200	250	24	10	15	42	45	30	4	47	54	56 000
MT 80	80	100	125	160	200	250	315	28	12	18	50	5	32,5	5	57	65	80 000
MT 112	80	100	125	160	200	250	315	32	15	21	60	60	40	6	65	74	112 000
MT 160	100	125	160	200	250	315	400	37	18	25	70	70	45	7	75	86	160 000
MT 224	125	160	200	250	315	400	500	43	21	30	85	90	60	8	88	100	224 000
MT 315	160	200	250	315	400	500	630	48	25	36	100	100	65	10	100	114	315 000
MT 450	200	250	315	400	500	630	800	56	3	42	120	120	80	12	116	136	450 000
MT 630	250	315	400	500	630	800	1000	66	36	50	140	140	90	14	140	156	630 000
MT 900	250	315	40	500	630	800	1000	78	44	60	170	180	120	16	164	185	900 000

APPLICATIONS

10 CONVEYOR CHAINS

HOLLOW PIN TYPE

BASED ON PN-71/M-84185, DIN 8167

Chains of this type are used in many kinds of sorting machines, in the textile industry and in conveyors designed for operating in highly contaminated conditions. All our chains are manufactured in Poland using high quality attested materials. The chains are checked by our Quality Control Department at each stage of the manufacturing process. In line with our customers' requirements, the materials for chain production subjected to heat treatment in order to obtain the desired hardness. Customers who choose our chains can be sure of the repeatability of their excellent workmanship.

TYPE FV

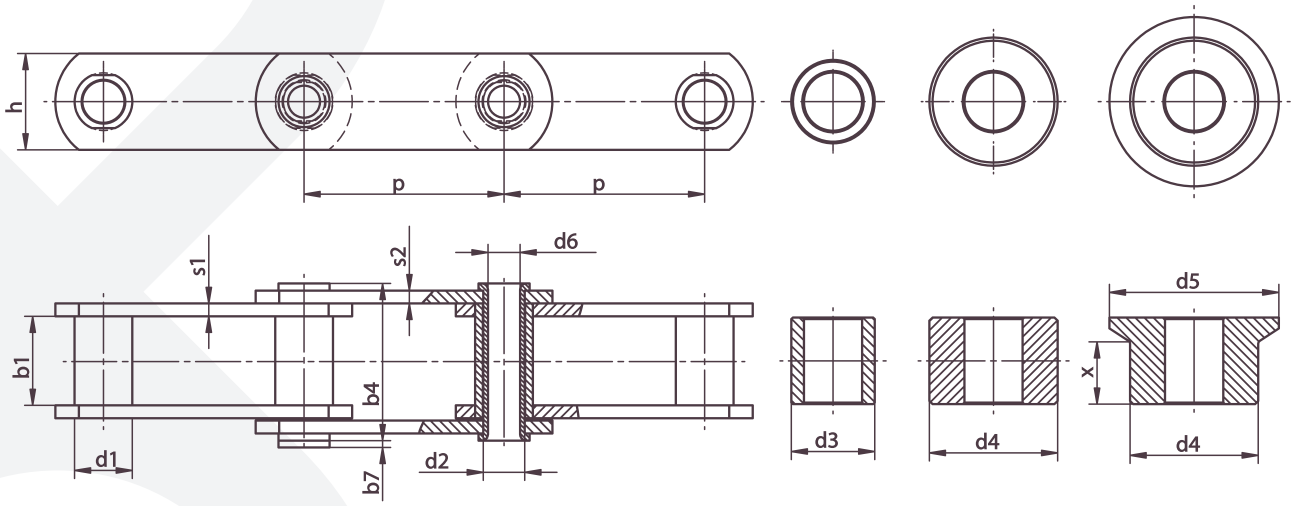

p *mm*					b1 *mm*	d2 *mm*	d1 *mm*	d3 *mm*	d4 *mm*	d5 *mm*	d6 *mm*	h int. *mm*	h ext. *mm*	s1, s2 *mm*	b4 *mm*	b4 +b7 *mm*	breaking load *N*
63	80	100	125	160	22	12	18	26	50	63	8	30	30	4	41	43	45 000
63	80	100	125	160	25	14	20	30	63	78	10	35	35	5	51	53	63 000
80	100	125	160	200	35	18	26	36	80	100	12	45	45	6	66	68	90 000
100	125	160	200	250	45	20	30	42	100	125	14	50	50	8	84	87	125 000
100	125	160	200	250	55	26	36	50	125	155	18	60	60	8	96	100	180 000
125	160	200	250	315	65	30	42	60	140	175	20	70	60	10	115	120	250 000
160	200	250	315	400	80	36	50	70	160	200	26	80	70	12	138	145	355 000
200	250	315	400	500	100	42	60	80	180	220	30	100	90	12	160	168	500 000
250	315	400	500	1000	125	50	70	90	200	240	36	120	100	15	195	205	710 000
250	315	400	500	1000	150	60	80	100	224	274	42	150	130	15	222	234	1 000 000

TYPE MC

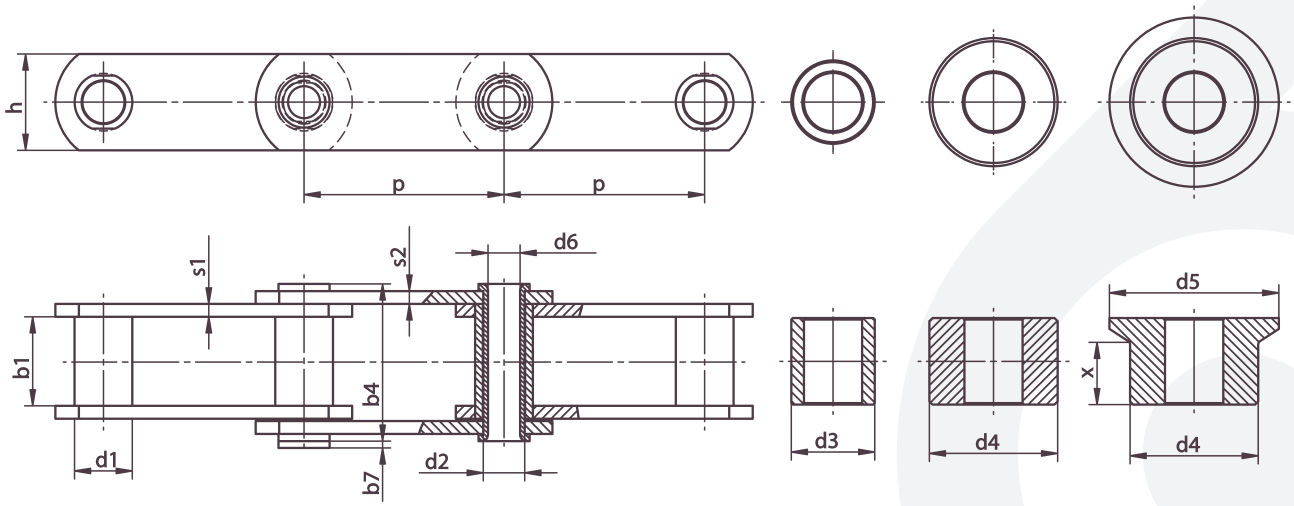

type	p mm					b1 mm	d2 mm	d1 mm	d3 mm	d4 mm	d5 mm	d6 mm	h mm	s1, s2 mm	b4 mm	b4 +b7 mm	breaking load N
MC 28	63	80	100	125	160	20	13	17,5	25	36	42	8,2	25	3,5	40	42	28 000
MC 56	80	100	125	160	200	24	15,5	21	30	50	60	10,2	35	4	46	48	56 000
MC 112	100	125	160	200	250	32	22	29	42	70	85	14,3	50	6	65	68	112 000
MC 224	125	160	200	250	315	43	31	41	60	100	120	20,3	70	8	85	88	224 000

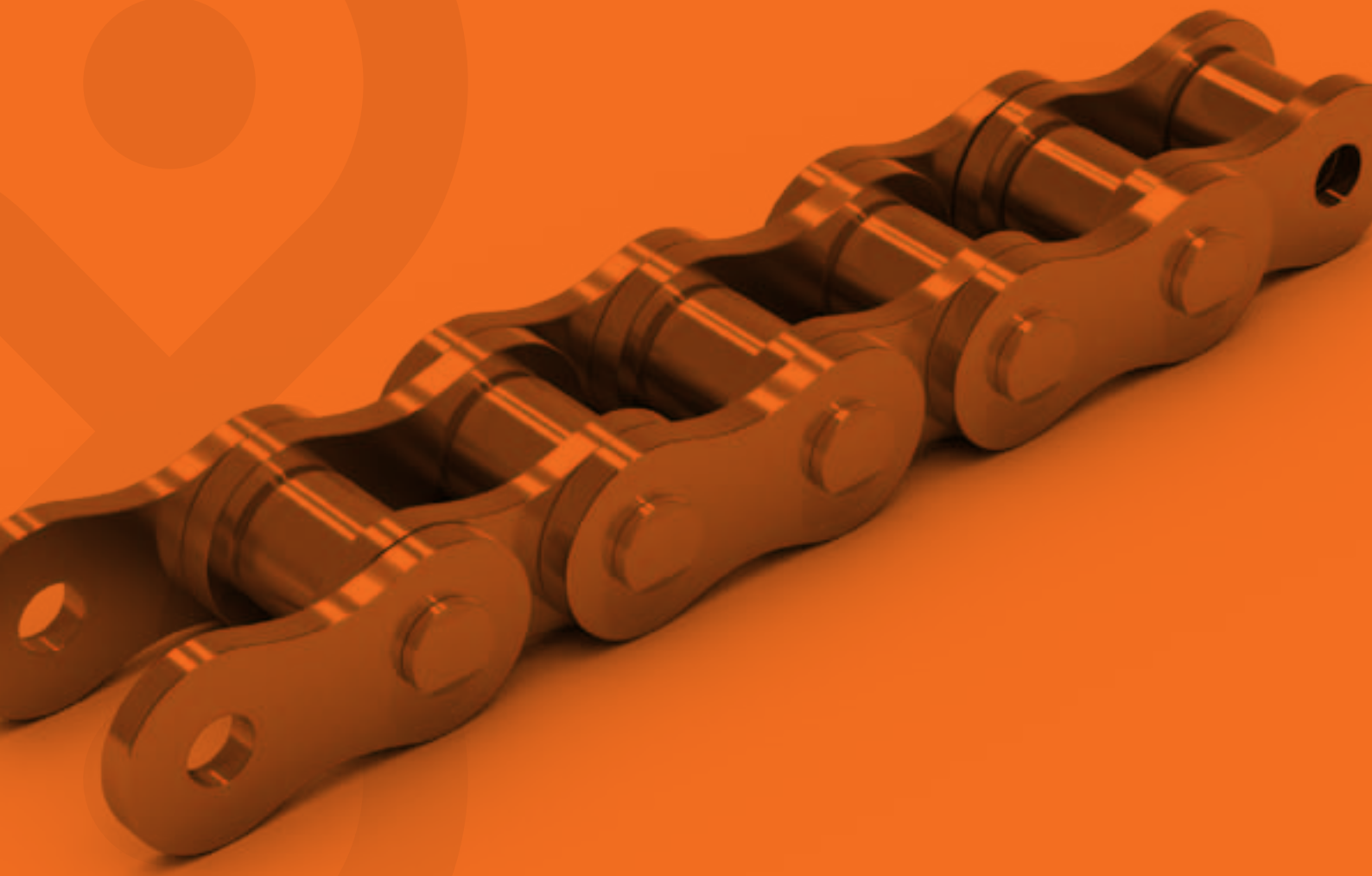

The company was established in 1980. The core of our business is conveyors and scraper (redler), roller, pin and plate chains and chain wheels, manufactured in compliance with DIN and PN standards, and according to the customer's documentation. We manufacture chains with a pitch up to 600 mm. We sell our products under the brands JANUS and SOLID.

MANUFACTURER:

JANUS®

JANUS SP. Z O.O.
WWW.JANUS.COM.PL
EXPORT@JANUS.COM.PL
+48 32 266 40 51 INT. 27
GRZYBOWA 1
41-200 SOSNOWIEC
POLAND

DEALER'S NAME:

INNOVATIVE ECONOMY
NATIONAL COHESION STRATEGY

JANUS®

EUROPEAN UNION
COHESION FUND
EUROPEAN REGIONAL
DEVELOPMENT FUND